ICC-ES Evaluation Report

ESR-4894

Reissued April 2024

Revised May 2024

Subject to renewal April 2026

This report also contains:

- LABC Supplement

- CBC Supplement

- FBC Supplement

ICC-ES Evaluation Reports are not to be construed as representing aesthetics or any other attributes not specifically addressed, nor are they to be construed as an endorsement of the subject of the report or a recommendation for its use. There is no warranty by ICC Evaluation Service, LLC, express or implied, as to any finding or other matter in this report, or as to any product covered by the report.

Copyright © 2024 ICC Evaluation Service, LLC. All rights reserved.

DIVISION: 05 00 00—METALS Section: 05 40 00—Cold-Formed Metal Framing	REPORT HOLDER: ELEVATE STRUCTURES, INC.	EVALUATION SUBJECT: ALPHA FRAMING SYSTEM	

1.0 EVALUATION SCOPE

Compliance with the following codes:

- 2021 and 2018 *International Building Code®* (IBC)

For evaluation for compliance with codes adopted by *Los Angeles Department of Building and Safety (LADBS)*, see ESR-4894 LABC Supplement.

Properties evaluated:

- Structural

2.0 USES

The Alpha Framing System is evaluated to support gravity loads.

3.0 DESCRIPTION

3.1 General:

The Alpha Framing System is a patented framing system that consists of Alpha Beams and T62 Columns. The Alpha Beams span between the T62 Columns. See Figures A and B.

3.2 Alpha Beam:

The Alpha Beams consist of the following components: cold-formed steel cee headers, cold-formed steel horizontal cees, cold-formed steel composite straps, cold-formed steel composite deck panels, concrete, and screws. For more information, see Tables 1A, 1B, and 1C and Figures 1A, 1B, 1C, and 1D.

T62 Columns: The T62 Columns consist of the following components: cold-formed steel outer posts, cold-formed steel inner posts, samson straps, and screws. For more information, see Tables 2A, 2B, and 2C and Figure 2.

4.0 DESIGN AND INSTALLATION

4.1 Design:

4.1.1 Alpha Beam Design: The Alpha Beam capacities are based on the composite action of the cross section shown in Figure 1A and the capacities are included Table 1C.

4.1.2 T62 Column Design: T62 Column capacities are included in Table 2C.

4.2 Installation:

The Alpha Beams are prefabricated except for the concrete fill and composite steel decks which are installed in the field.

The T62 Columns are prefabricated and installed in the field. Connections of the T62 Columns to the Alpha Beam and the supporting structure are outside the scope of this report.

5.0 CONDITIONS OF USE:

The Alpha Framing System described in this report complies with, or is a suitable alternative to what is specified in, those codes listed in Section 1.0 of this report, subject to the following conditions:

5.1 The products are manufactured, identified and installed in accordance with this report and the report holder's published installation guidelines and instructions. If there is a conflict between the report holder's published installation guidelines and this report, this report governs.

5.2 The base metal thickness for the cold-formed steel components delivered to the jobsite must be at least 95 percent of the base (design) metal thickness.

5.3 Calculations and details demonstrating that the loads applied to the beam and columns comply with the report must be submitted to the code official for approval. Calculations and drawings, must be prepared, signed and sealed by a registered design professional where required by the statutes of the jurisdiction in which the project is to be constructed.

5.4 Concrete-filled section must not be used to support loads that are predominantly vibratory, such as those for operation of heavy machinery, reciprocating motors or moving loads.

6.0 EVIDENCE SUBMITTED

Reports of load testing and data analysis in accordance with AISI S100.

7.0 IDENTIFICATION

7.1 Product labeling of the Alpha Beams and T62 Columns must include the name of the report holder, the member designation, and the ICC-ES mark of conformity. The evaluation report number (ICC-ES ESR-4894) may be used in lieu of the mark of conformity.

7.2 The report holder's contact information is the following:

ELEVATE STRUCTURES, INC.
3807 CARROLLTON VILLA RICA HIGHWAY
VILLA RICA, GEORGIA 30180
(877) 456-1602
www.elevatecs.com

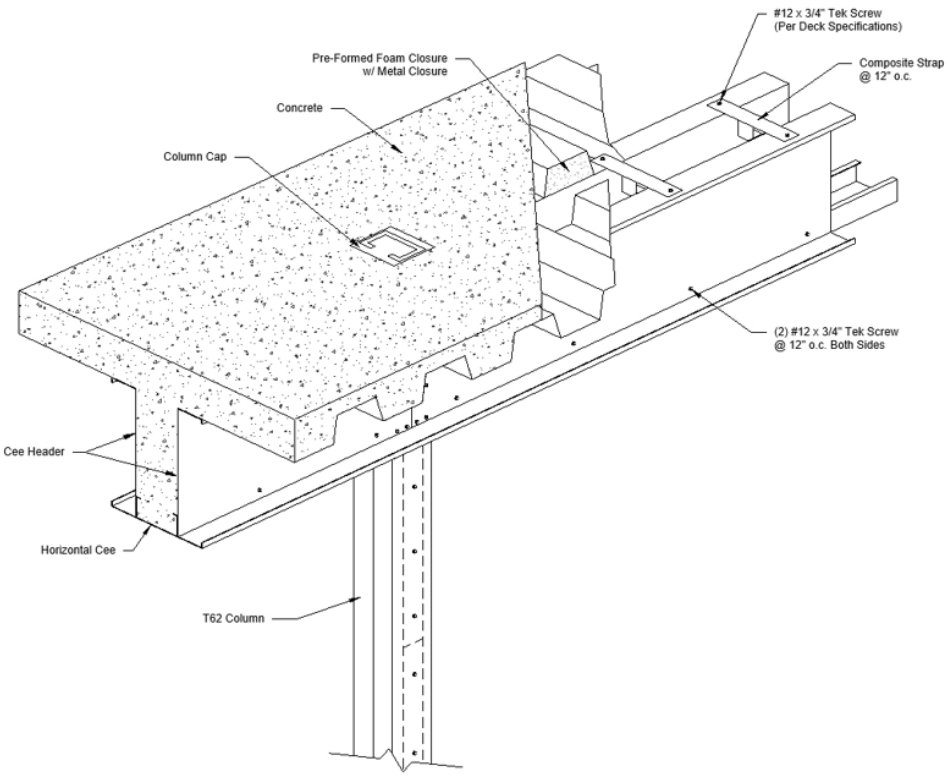

Figure A—Isometric View of Alpha Beam, Concrete Slab, and T62 Column

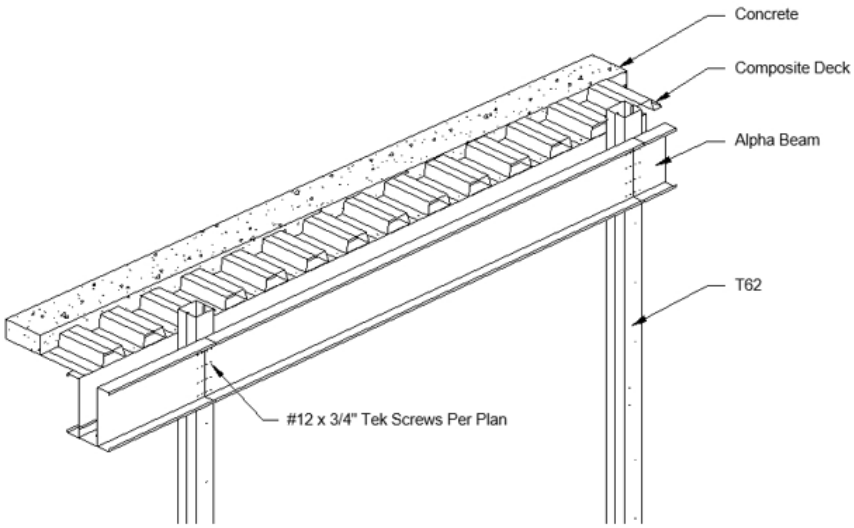

Figure B—Isometric View of Alpha Beam, Concrete Slab, and T62 Column

TABLE 1A—ALPHA BEAM COMPONENTS MATERIAL AND PHYSICAL PROPERITES[1,2,3,4,5]

COMPONENTS	MATERIAL SPECIFICATIONS	PHYSCIAL SPECIFICATIONS
Cee Header	ASTM A653 Modified 57 ksi (G60)	14 and 16 gauge, Table 1B and Figure 1B
Horizonal Cee	ASTM A653 Modified 57 ksi (G60)	14 and 16 gauge, Table 1B and Figure 1B
Composite Strap	ASTM 653 SS Grade 50 Class 1, 3, or 4 or ASTM 1011 Grade 50 (G60)	16 gauge, Figure 1A
Composite Steel Deck	ASTM A653 Grade SS Grade 50, with Type 3 embossments as described in SDI C.	18 or 20 gauge, Figure 1C
Concrete	Normal weight (145 pcf) in accordance with the IBC and must have a minimum 28-day compressive strength of 3000 psi (20.7 MPa).	
Screws	12 by ¾ inch long FPHSD screws per ICC-ES ESR-3006 or equivalent.	

1. 14 gauge (0.069-inch design base metal thickness), 16 gauge (0.056-inch), 18 gauge (0.047-inch), and 20 gauge (0.036-inch).
2. The cee header, horizontal cee, and composite strap have a minimum G60 coating. Other coatings may be used in accordance with AISI S240.
3. The cee header and horizontal cee are manufactured from steel complying with Elevate Structures Specification named "ASTM A653 Modified 57 ksi (G60)", dated 4/6/2022.
4. The composite strap may also be manufactured from ASTM A653 CS Type B or other steels with the following minimum properties: yield strength = 50 ksi, tensile strength = 55 ksi, and an elongation in 2-inch greater than 12%.
5. The composite steel deck must meet the minimum properties noted in the table above and the finish/coating requirements of SDI C. Design capacity of the composite steel deck and slab away from the beam is outside the scope of this report.

TABLE 1B—CEE HEADER AND HORIZONTAL CEE PHYSICAL PROPERITES

MEMBER DESIGNATION	GAUGE	DEPTH (inch)	FLANGE (inch)	LIP (inch)	INSIDE CORNER RADII (inch)
4x2C16	16	4	2	0.75	0.1875
4x3C14	14	4	3	0.75	0.1875
8x2.5C16	16	8	2.5	0.75	0.1875
12x3C14	14	12	3	0.75	0.1875

For **SI:** 1 inch = 25.4 mm

TABLE 1C—ALPHA BEAM CAPACITY[1,2,3,4,5,6,7,8]

MEMBER DESIGNATION	COMPOSITE STEEL DECK	CONCRETE THICKNESS (inch)	CONCRETE BEAM OVERALL DEPTH (inch)	SPAN (feet)	ALLOWABLE (ASD) UNIFORM LOAD (klf)
A-B-O84-I2.0	2", 18 gauge	4 to 4.5	12 to 12.5	10	3.15
A-B-O84-I2.0	2", 18 gauge	4 to 4.5	12 to 12.5	12	2.05
A-B-O124-I3.0	2", 18 gauge	4 to 4.5	16 to 16.5	15	2.31
A-B-O84-I2.0	3", 20 gauge	5 to 5.5	13 to 13.5	10	3.32
A-B-O84-I2.0	3", 20 gauge	5 to 5.5	13 to 13.5	12	2.32
A-B-O124-I3.0	3", 20 gauge	5 to 5.5	17 to 17.5	15	2.62

For **SI:** 1 inch = 25.4 mm

1. A-B-O84-I2.0 indicates Alpha Beam with (2) 8x2.5C16 cee headers and (1) 4x2C16 horizontal cee. A-B-O124-I3.0 indicates Alpha Beam with (2) 12x3C14 cee headers and (1) 4x3C14 horizontal cee.
2. The concrete thickness is measured from the bottom flute of the composite steel deck to the top of concrete.
3. Composite strap and fastener spacing is in accordance with the figures of this report and the report holder's approved quality control documentation.
4. Beams do not require shoring during concrete pour.
5. The tabulated values are applicable to interior beams where the composite steel decks and concrete is installed on each side of the beam, as shown in Figure 1A.
6. To calculate LRFD values, multiply by the ASD safety factor of 2 and multiply again by the LRFD φ factor of 0.8
7. The deflection at the allowable uniform loads is less than 1/360 of the span.
8. 2 conduit steel pipes (2-inch in diameter with a nominal wall thickness of 0.065-inch) may be placed on each side of the beam as shown in Figure 1D and the allowable uniform load must be reduced by 5 percent.

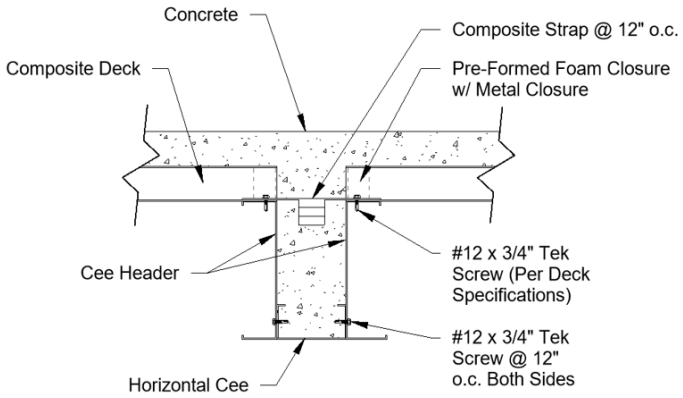

Figure 1A—Cross-Section of Alpha Beam and Concrete Slab
(The pre-formed foam closure with metal closure is used for concrete pouring purposes only.)

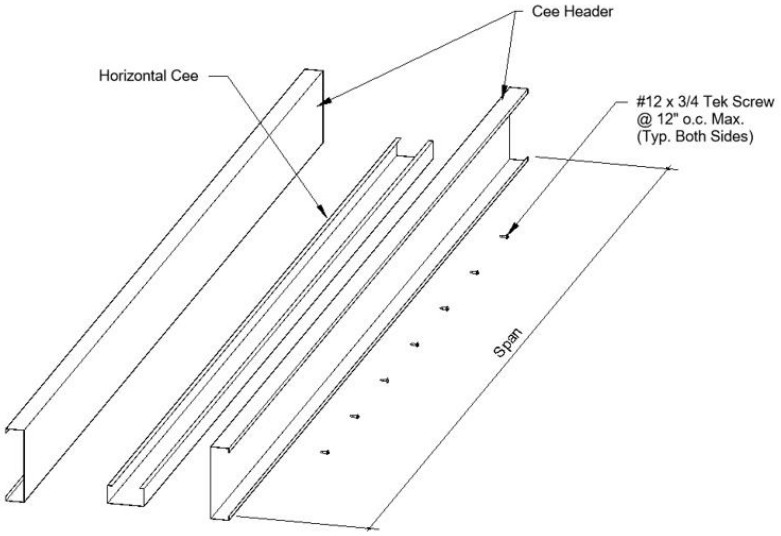

Figure 1B—Alpha Beam—Partial View of Connecting Cee Headers and Horizontal Cee

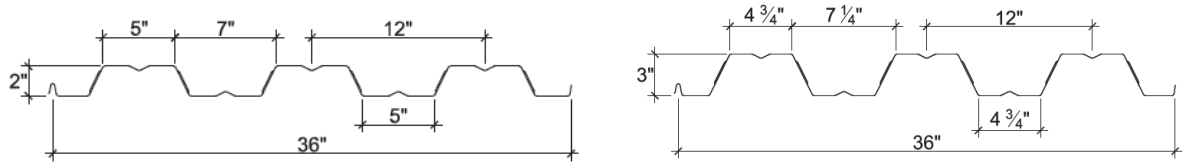

Figure 1C—2" and 3" Composite Steel Decks

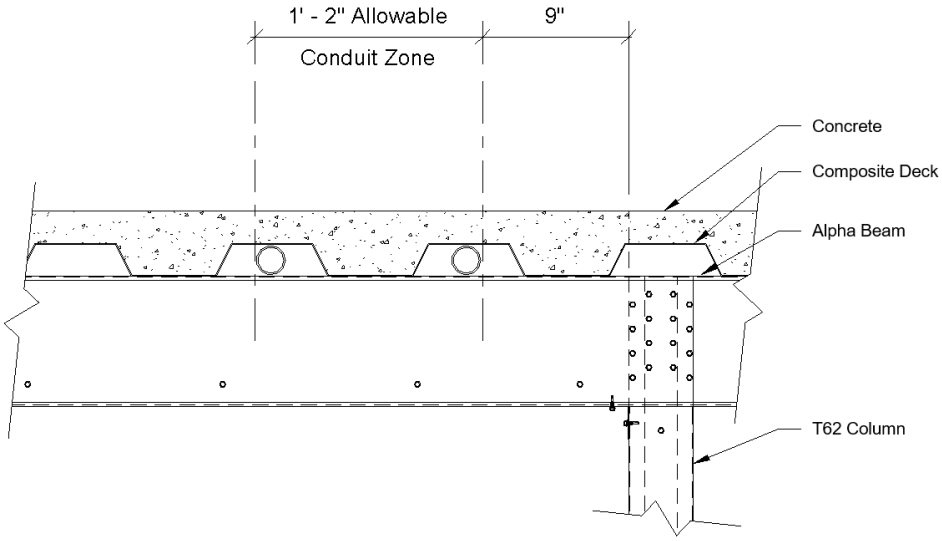

Figure 1D—Placement of Steel Conduit Pipes

TABLE 2A—T62 COLUMN COMPONENTS MATERIAL AND PHYSICAL PROPERITES[1,2,3,4]

COMPONENTS	MATERIAL SPECIFICATIONS	PHYSCIAL SPECIFICATIONS
Outer Post	ASTM A653 Modified 57 ksi (G60)	12, 14, and 16 gauge, Table 2B and Figure 2
Inner Post	ASTM A653 Modified 57 ksi (G60)	12, 14, and 16 gauge, Table 2B and Figure 2
Samson Strap	ASTM 653 SS Grade 50 Class 1, 3, or 4 or ASTM 1011 Grade 50 (G60)	18 gauge, Figure 2
Screws	12 by ¾ inch long FPHSD screws per ICC-ES ESR-3006 or equivalent.	

1. 12 gauge (0.096-inch design base metal thickness), 14 gauge (0.069-inch), 16 gauge (0.056-inch), and 18 gauge (0.0460-inch).
2. The outer post, inner post, and samson strap has a minimum G60 coating. Other coatings may be used in accordance with AISI S240.
3. The outer and inner posts are manufactured from steel complying with Elevate Structures Specification named "ASTM A653 Modified 57 ksi (G60)", dated 4/6/2022.
4. The samson strap may also be manufactured from ASTM A653 CS Type B or other steels with the following minimum properties: yield strength = 50 ksi, tensile Strength = 55 ksi, and an elongation in 2-inch greater than 12%.

TABLE 2B—INNER AND OUTER POST PHYSICAL PROPERITES

MEMBER	GAUGE	DEPTH (inch)	FLANGE (inch)	LIP (inch)	INSIDE CORNER RADII (inch)
4x2C16	16	4	2	0.75	0.1875
4x2C14	14	4	2	0.75	0.1875
4x2C12	12	4	2	0.75	0.1875
6x2C12	12	6	2	0.75	0.1875
4x2.5C16	16	4	2.5	0.75	0.1875
4x2.5C14	14	4	2.5	0.75	0.1875
4x2.5C12	12	4	2.5	0.75	0.1875

For **SI:** 1 inch = 25.4 mm

TABLE 2C—T62 CAPACITY[1,2,3,4]

MEMBER DESIGNATION	OUTER POST	INNER POST	SAMSON STRAP	MAXIMUM UNBRACED COLUMN HEIGHT		
				12 feet	14 feet	16 feet
				Allowable Column Capacity (ASD), kips		
A-C-O44-I2.5-16	(2) 4x2C16	4x2.5C16	Mid-height	30.6	-	-
A-C-O44-I2.5-14	(2) 4x2C14	4X2.5C14	Mid-height	35.5	30.6	-
A-C-O44-I2.5-12	(2) 4x2C12	4X2.5C12	Mid-height	49.5	43.5	35.8
A-C-O64-I2.5-12	(2) 6x2C12	4X2.5C12	Mid-height	63.7	49.8	46.2

For **SI:** 1 foot = 0.3048 m; 1 kip = 4448 N

1. Fastener spacing is in accordance with the figures of this report and the report holder's approved quality control documentation.
2. To calculate LRFD values, multiply by the ASD safety factor of 2 and multiply again by the LRFD φ factor of 0.8
3. Tabulated values based on concentric loads.
4. Values based on support conditions with an effective length factor (k) equal to 1.0.

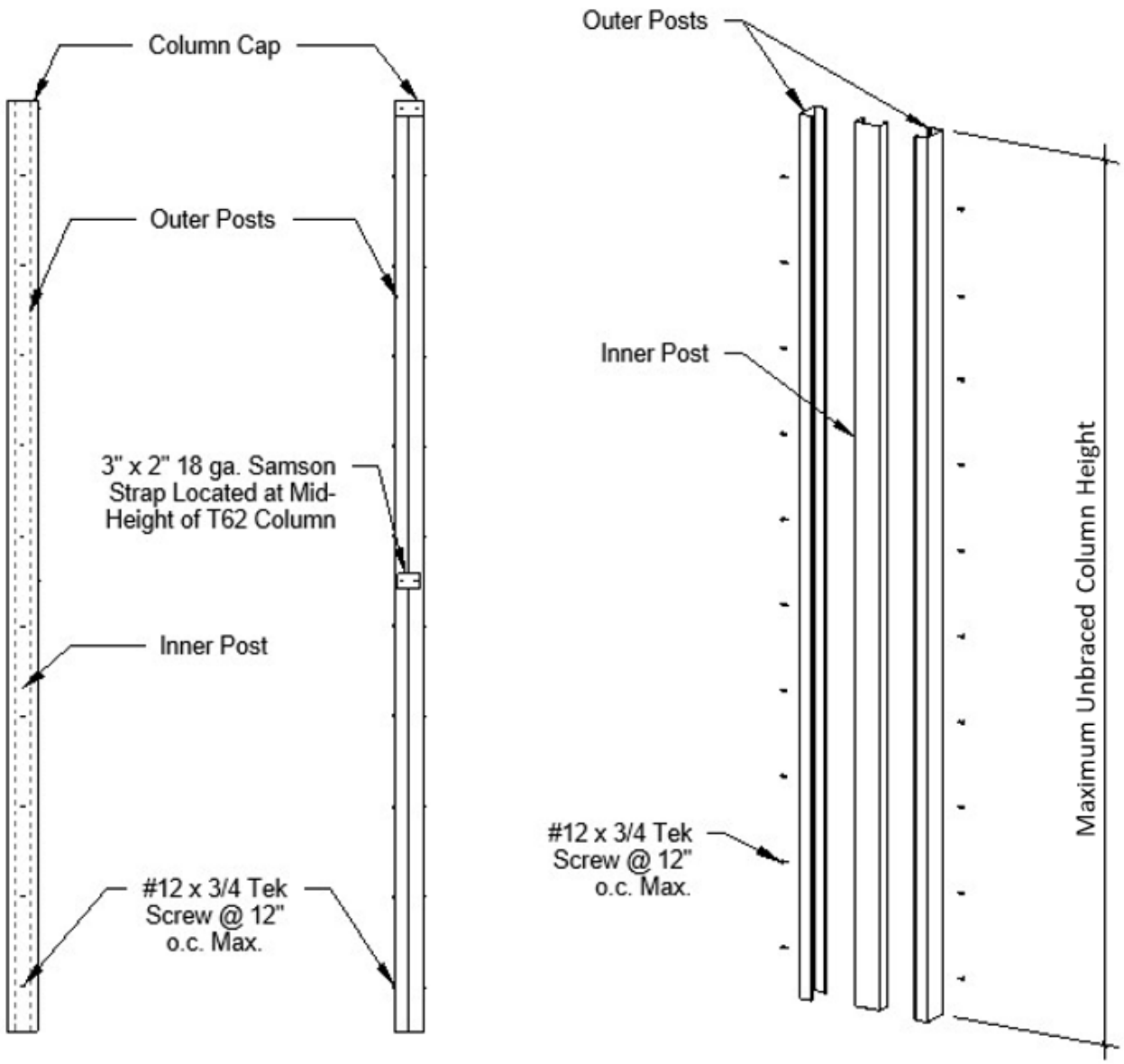

Figure 2—T62 Column

DIVISION: 05 00 00—METALS
Section: 05 40 00—Cold-Formed Metal Framing

REPORT HOLDER:

ELEVATE STRUCTURES, INC.

EVALUATION SUBJECT:

ALPHA FRAMING SYSTEM

1.0 REPORT PURPOSE AND SCOPE

Purpose:

The purpose of this evaluation report supplement is to indicate that the Alpha Framing System, described in ICC-ES evaluation report ESR-4894 has also been evaluated for compliance with the code noted below as adopted by the Los Angeles Department of Building and Safety (LADBS).

Applicable code edition:

- 2020 *City of Los Angeles Building Code* (LABC)

2.0 CONCLUSIONS

The Alpha Framing System, described in Sections 2.0 through 7.0 of the evaluation report ESR-4894, complies with the LABC Chapter 22 and is subject to the conditions of use described in this supplement.

3.0 CONDITIONS OF USE

The Alpha Framing System described in this evaluation report supplement must comply with all of the following conditions:

- All applicable sections in the evaluation report ESR-4894.
- The design, installation, conditions of use and identification of the Alpha Framing System is in accordance with the 2018 *International Building Code*® (IBC) provisions noted in the evaluation report ESR-4894.
- The design, installation and inspection are in accordance with additional requirements of LABC Chapters 16 and 17, as applicable.

This supplement expires concurrently with the evaluation report, reissued April 2024 and revised May 2024.

ICC-ES Evaluation Reports are not to be construed as representing aesthetics or any other attributes not specifically addressed, nor are they to be construed as an endorsement of the subject of the report or a recommendation for its use. There is no warranty by ICC Evaluation Service, LLC, express or implied, as to any finding or other matter in this report, or as to any product covered by the report.

Copyright © 2024 ICC Evaluation Service, LLC. All rights reserved.

DIVISION: 05 00 00—METALS
Section: 05 40 00—Cold-Formed Metal Framing

REPORT HOLDER:

ELEVATE STRUCTURES, INC.

EVALUATION SUBJECT:

ALPHA FRAMING SYSTEM

1.0 REPORT PURPOSE AND SCOPE

Purpose:

The purpose of this evaluation report supplement is to indicate that Alpha Framing System, described in ICC-ES evaluation report ESR-4894, has also been evaluated for compliance with the code noted below.

Applicable code edition:

- 2019 *California Building Code* (CBC)

For evaluation of applicable chapters adopted by the California Office of Statewide Health Planning and Development (OSHPD) AKA: California Department of Health Care Access and Information (HCAI) and the Division of State Architect (DSA), see Sections 2.1.1 and 2.1.2 below.

2.0 CONCLUSIONS

2.1 CBC:

The Alpha Framing System, described in Sections 2.0 through 7.0 of the evaluation report ESR-4894, complies with CBC Chapter 22, provided the design and installation are in accordance with the 2018 *International Building Code®* (IBC) provisions noted in the evaluation report and the additional requirements of CBC Chapter 16 and 17.

2.1.1 OSHPD: The applicable OSHPD Sections and Chapters of the CBC are beyond the scope of this supplement.

2.1.2 DSA: The applicable DSA Sections and Chapters of the CBC are beyond the scope of this supplement.

This supplement expires concurrently with the evaluation report, reissued April 2024 and revised May 2024.

ICC-ES Evaluation Reports are not to be construed as representing aesthetics or any other attributes not specifically addressed, nor are they to be construed as an endorsement of the subject of the report or a recommendation for its use. There is no warranty by ICC Evaluation Service, LLC, express or implied, as to any finding or other matter in this report, or as to any product covered by the report.

Copyright © 2024 ICC Evaluation Service, LLC. All rights reserved.

DIVISION: 05 00 00—METALS
Section: 05 40 00—Cold-Formed Metal Framing

REPORT HOLDER:

ELEVATE STRUCTURES, INC.

EVALUATION SUBJECT:

ALPHA FRAMING SYSTEM

1.0 REPORT PURPOSE AND SCOPE

Purpose:

The purpose of this evaluation report supplement is to indicate that Alpha Framing System, described in ICC-ES evaluation report ESR-4894, has also been evaluated for compliance with the code noted below.

Applicable code edition:

2020 *Florida Building Code—Building*

2.0 CONCLUSIONS

The Alpha Framing System, described in Sections 2.0 through 7.0 of ICC-ES evaluation report ESR-4894, complies with the 2020 *Florida Building Code—Building*. The design requirements must be determined in accordance with the *Florida Building Code—Building.* The installation requirements noted in ICC-ES evaluation report ESR-4894 for the 2018 *International Building Code®* meet the requirements of the *Florida Building Code—Building.*

Use of the Alpha Framing System has also been found to be in compliance with the High-Velocity Hurricane Zone provisions of the *Florida Building Code—Building*.

For products falling under Florida Rule 61G20-3, verification that the report holder's quality assurance program is audited by a quality assurance entity approved by the Florida Building Commission for the type of inspections being conducted is the responsibility of an approved validation entity (or the code official when the report holder does not possess an approval by the Commission).

This supplement expires concurrently with the evaluation report, reissued April 2024 and revised May 2024.

ICC-ES Evaluation Reports are not to be construed as representing aesthetics or any other attributes not specifically addressed, nor are they to be construed as an endorsement of the subject of the report or a recommendation for its use. There is no warranty by ICC Evaluation Service, LLC, express or implied, as to any finding or other matter in this report, or as to any product covered by the report.

Copyright © 2024 ICC Evaluation Service, LLC. All rights reserved.