ICC-ES Evaluation Report

ESR-4891

Reissued August 2024

This report also contains:

- CBC Supplement

Subject to renewal August 2025

ICC-ES Evaluation Reports are not to be construed as representing aesthetics or any other attributes not specifically addressed, nor are they to be construed as an endorsement of the subject of the report or a recommendation for its use. There is no warranty by ICC Evaluation Service, LLC, express or implied, as to any finding or other matter in this report, or as to any product covered by the report.

Copyright © 2024 ICC Evaluation Service, LLC. All rights reserved.

DIVISION: 31 00 00—EARTHWORK Section: 31 63 00—Bored Piles	REPORT HOLDER: GRIP-TITE® MANUFACTURING CO., LLC.	EVALUATION SUBJECT: GRIP-TITE® PUSH PIER SYSTEM	

1.0 EVALUATION SCOPE

Compliance with the following codes:

- 2018, 2015 and 2012 *International Building Code®* (IBC)

Properties evaluated:

- Structural

2.0 USES

Grip-Tite® Push Pier Systems are designed to resist axial compressive loads from the supported structures. The systems are used as support for structures, to recover lost elevations and to provide uniform supplemental support to foundations. Grip-Tite® Push Pier Systems may stop settlement of the structure and are used in residential, commercial, and industrial foundation problems. Grip-Tite® Push Pier Systems can be installed in either interior or exterior applications.

3.0 DESCRIPTION

3.1 General:

Grip-Tite® Push Pier Systems consist of hydraulically driven steel piling using round tube sections (connected with couplers), attached to brackets that are in contact and connected with the load-bearing foundation of a structure.

3.2 System Components:

Grip-Tite® Push Pier System consists of 3-in (76 mm) outside diameter starter and extension pier tubes (FP3T) connected with tube couplers (FP6C) and Type A side-load bracket, for attachment to concrete foundations.

3.2.1 Piling Shafts: The starter and extension pier tube sections are 3-in-outside-diameter (76 mm) in 3.0-foot-long (914 mm) sections. All pier tubes have a nominal thickness of 0.165 in (4 mm). See Figure 2 for FP3T.

3.2.2 Coupler and Friction Reduction Collar: Couplers (FP6C) are used as interconnecting elements between the pier tubes, welded to each tube at its tip and embedded 1½-in (38 mm) into the lead end. The Friction Reduction Collar (FP3FCH) is connected to the Push Pier starter tube that is inserted into the soil. The collar creates an opening in the soil that has a larger diameter than the pier pipe to reduce the friction on the pier pipe. This also allows the installer to load test and verify the pier is encountering a firm bearing stratum or rock suitable to support the design load. The Friction Reduction Collar is welded with a minimum 3/16-in (4.8 mm) minimum fillet weld. The weld must adhere to the guidelines of AWS D1.1 using a minimum ER70 welding rod. See Figure 2 for additional information.

3.2.3 The Grip-Tite® Push Pier Bracket Assembly: The bracket assemblies are side-loaded brackets that connect with 3-in-outside-diameter (76 mm) pier tubes. The brackets support axial compression loads only; this introduces structural and bracket eccentricity (eccentricity between applied loading and reactions on the bracket assembly and the foundation structure). The Grip-Tite® Push Pier Bracket consists of the FP3BA Bracket Assembly, one cap plate and two (2) 3/4-in (19 mm) diameter by 12-in (305 mm) long threaded rods used with four (4) 3/4-in (19 mm) Hex head nuts. The FP3BA Bracket Assembly is designed with a 3 7/8-in (98 mm) outside diameter bracket tube section that is used to transfer compression loading from the existing concrete foundations to the pier tube sections.

3.2.3.1 FP3BA Bracket: The bracket assembly consists of a bracket tube body, vertical plate, horizontal plates, and gussets and are factory welded together. The bracket assembly is constructed from one ½-in (13 mm) thick steel horizontal flat plate, 10-in (254 mm) wide by 8-in (203 mm) deep, one ½-in (13 mm) thick steel vertical flat plate, 14-in (356 mm) wide, by 10-in (254 mm) tall. The vertical flat plate has (4) 9/16-in (14 mm) factory made circular holes for installation of post installed concrete anchors (supplied by others), complying with Section 3.2.3.3, into the concrete foundation. The 3 7/8-in. (98 mm) outside diameter by 3/8-in (9.5 mm) thick bracket tube section is then welded to the angle bracket with a 5 degree maximum span from vertical. The bracket support flat plate wedge is 3/8-in (9.5 mm) thick by 2 to 5-in (51 to 127 mm) wide and 8-in (203 mm) long. The sleeve plate is 3/4-in (19 mm) thick, 5-in (127 mm) wide by 9-1/2-in (241 mm) long. The sleeve plate has two (2) 13/16-in (21 mm) factory made circular holes for the installation of threaded rods and nuts that provide adjustment allowance in conjunction with the cap plate. See Figure 1 for bracket details and components.

3.2.3.2 Cap Plate: The cap plate has two (2) 13/16-in (21 mm) factory made circular holes for the installation of threaded rods and nuts that provide adjustment allowance. The cap plate is 1-in (25 mm) thick, 4-in (102 mm) wide by 8-in (204 mm) long. The cap plate is reinforced with two (2) 3 7/8-in (98 mm) outside diameter by 3/8-in (9.5 mm) thick by ½-in (13 mm) long round tubes, welded on the center of each face of the cap plate, with a minimum 5/16-in (8.0 mm) minimum fillet weld. See Figure 1 for additional information.

3.2.3.3 Concrete Anchors: Each bracket may be installed with post-installed anchors with an effective minimum embedment of 5-in (127 mm); four (4) 1/2-in (13 mm) diameter by 5½-in (140 mm) long Simpson Titen HD carbon steel anchors (ESR-2713) or equivalent.

3.3 Material Specifications:

3.3.1 Pier tube (FP3T) is manufactured from steel tubing that has a 3-in (76 mm) outside diameter by a 0.165-in (4 mm) wall thickness with a length of 36-in (914 mm) conforming to ASTM A500, Grade C. The minimum yield strength is 46 ksi (317 MPa) with a minimum tensile strength of 62 ksi (427 MPa).

3.3.2 Tube Coupler (FP6C): is manufactured from steel tubing that is 2 5/8-in (67 mm) outside diameter, 0.188-in (4.8 mm) inside diameter by 4-in (102 mm) long conforming to ASTM A513 Type 5, Grade 1026. The minimum yield strength is 70 ksi (483 MPa) with a minimum tensile strength of 80 ksi (552 MPa).

3.3.3 Friction Reduction Collar (FP3FCH): is fabricated from steel tubing that has a nominal 3-1/4-in (83 mm) outside diameter with a 0.220-in (5.6 mm) wall thickness and a length of 3-1/8-in (79 mm), conforming to ASTM A513 Type 1 or Type 5 Grade 1010 steel. The minimum yield strength is 32 ksi (221 MPa) with a minimum tensile strength of 45 ksi (310 Mpa).

3.3.4 FP3BA Bracket: The bracket assembly is fabricated from ASTM A36 steel plates with a minimum yield strength of 36 ksi (248 MPa) and a minimum tensile strength of 58 ksi (400 MPa). The bracket tube section is fabricated in conformance to ASTM A513 Type 5, Grade 1026. The minimum yield strength is 70 ksi (483 MPa) with a minimum tensile strength of 80 ksi (552 MPa). Plates and bracket tube are factory welded with fillet and partial penetration welds.

3.3.5 Cap Plate (FP3C): The cap plate is fabricated from ASTM A36 flat bar with a minimum yield strength of 36 ksi (248 MPa) and a minimum tensile strength of 58 ksi (400 MPa). The reinforcement tube sections are fabricated in conformance to ASTM A513 Type 5, Grade 1026. The minimum yield strength is 70 ksi (483 MPa) with a minimum tensile strength of 80 ksi (552 MPa).

3.3.6 Threaded Rods (FP34R): The threaded rods are manufactured from ASTM 193, Class B, Grade 7 Zinc-plated steel per ASTM F1941 with a minimum yield strength of 105 ksi (724 MPa) and a minimum tensile strength of 125 ksi (862 MPa).

3.3.7 Hex Nuts (FP34N): The hex nuts conform to ASTM A194 & ASME SA193 with a zinc-plating per ASTM A194.

4.0 DESIGN AND INSTALLATION

4.1 Design:

4.1.1 General: Engineering calculations (analysis and design) and drawings, must be prepared by a registered design professional, must be submitted to, and be subjected to the approval of the code official for each project, and must be based on accepted engineering principles, as described in IBC Section 1604.4, and must conform to 2018, 2015 and 2012 IBC Section 1810. The design method for the steel components is Allowable Strength Design (ASD) as described in IBC Section 1602 and AISC 360 Section B3.4. The Engineering analysis must address hydraulically driven foundation system performance related to structural and geotechnical requirements.

The structural analysis must consider all applicable internal forces (shear, bending moments and torsional moments, if applicable) due to the applied loads, structural eccentricity, and maximum span(s) between push pier systems. The minimum embedment depth for various loading conditions must be included based on the most stringent requirements of the following: engineering analysis, allowable capacities noted in this report, site-specific geotechnical investigation report and site-specific load tests, if applicable. A soil investigation report in accordance with this Section must be submitted for each project, when requested by the authority having jurisdiction. The soil interaction capacity between the pier and the soil including the required safety factor and the soil effects of the hydraulically driven steel pier installation must be determined in accordance with the applicable code by a registered design professional. The maximum installation force and working capacity of the hydraulically driven steel pier system must be determined in accordance with Grip-Tite® Push Pier System Foundation Pier Installation Instructions and as recommended by the registered design professional. The allowable strengths (allowable capacities) of the steel components of the Grip-Tite® Push Pier System are described in Table 1.

A written report of the geotechnical investigation, when requested by the authority having jurisdiction, must be submitted to the local code official as part of the required submittal documents, as prescribed in Section 107 of the IBC at the time of the permit application. The geotechnical report must include, but not limited to, all of the following information:

- A site survey is necessary of the area where the Piers are going to be driven to locate any possible interference such as utilities, plumbing, electrical, or phone lines.
- A complete record of the soil boring and penetration test logs and soil samples.
- A record of the soil profile.
- Information on the ground-water table, frost depth, and corrosion related parameters, as described in Section 5.5 of this report.
- Soil design parameters; soil deformation parameters; and relative pier support conditions of the piers.
- Soil properties, including those affecting the design such as support conditions of the piers as defined in Section 1810.2.1 of the IBC.
- Confirmation of the suitability of Grip-Tite® Push Piers Systems driven foundation system for the specific project.
- Recommendation for design criteria, including not limited to, mitigations of the effects of differential settlement and varying soil strength, and effects of adjacent loads.
- Recommended center-to-center spacing of the push pier foundations, if different from Section 5.14 of this report; and reduction of allowable loads due to the group action, if necessary.
- Field inspection and reporting procedures (to include procedures for verification of the installed bearing capacity, when required).
- Load test requirements.
- Any questionable soil characteristics and special design provisions, as necessary.
- Expected total and differential settlement.
- The axial compression load soil capacities for allowable capacities that cannot be determined from this evaluation report.
- Minimum pier depth, if any, based on local geologic hazards such as frost, expansive soils, or other conditions.

4.1.2 Bracket Capacity (P1):

Table 1 describes the allowable axial compression capacity of the Grip-Tite® Push Pier Foundation System. The connections of the building structure to the brackets must be designed and included in the construction documents. Only localized limit states of supporting concrete 2-way punching shear and concrete bearing have been evaluated in this evaluation report. The concrete foundation must be designed and justified to the satisfaction of the local code official with due consideration to the eccentricity of the applied loads, including reactions provided by the brackets, acting on the concrete foundation. The effects of reduced lateral sliding resistance due to uplift from wind or seismic loads must be considered for each project. Refer to Table 1 of this report for the allowable bracket capacities.

4.1.3 Shaft Capacity (P2):

Table 1 describes the allowable axial compression loads of the shafts and Table 2 describes the mechanical properties of the shafts which are based on a 50-year corrosion effect in accordance with Section 3.6 of AC517. The tops of the shafts must be braced as prescribed in Section 1810.2.2 of the IBC, and the supported foundation structures such as concrete footings, are assumed to be adequately braced such that supported foundation structures provide lateral stability for the pier systems. In accordance with Section 1810.2.1, any soil other than fluid soil must be deemed to afford sufficient lateral support to prevent buckling of the systems that are braced, and the unbraced length is defined as the length of piers that is standing in air, water or fluid soils plus an additional 5-ft. when embedded into firm soil or an additional 10-ft when embedded into soft soil. Firm soils shall be defined as any soil with a Standard Penetration Test blow count of five or greater. Fluid soils shall be defined as any soil with a Standard Penetration Test blow count of zero (weight of hammer (WOH) or weight of rods (WOR). Standard Penetration Test blow count shall be determined in accordance with ASTM D1586.

The elastic shortening of the pier shaft will be controlled by the strength and section properties of the shaft sections and couplers. For loads up to and including the allowable limits found in this report, the elastic shortening of the shaft can be estimated as:

$$\Delta_{shaft} = P\,L/(A\,E)$$

where:

Δ_{shaft} = Length change of shaft resulting from elastic shortening, in. (mm)

P = applied axial load, lbf (N)

L = effective length of shaft, in.(mm)

A = cross-sectional area of the shaft, $in.^2$

E = Young's modulus of the shaft, ksi (Mpa)

4.2 Installation:

4.2.1 Grip-Tite® Push Pier Systems must be installed in accordance with this Section, site-specific approved construction documents (Engineering drawings and specifications), and the manufacturers' written installation instructions, In any case of conflict, the most stringent requirement governs.

4.2.2 Grip-Tite® Push Pier Systems must be installed by Grip-Tite® trained and certified installers.

4.2.3 Grip-Tite® Push Pier Systems must be installed according to a pre-approved plan of placement.

4.2.4 Small excavations are dug for each access point for the placement of the Piers. The total space needed for the foundation is typically 3 square feet.

4.2.5 The soil must be removed a minimum of eight (8) inches beneath the footing. The footing must be thoroughly cleaned in order to securely attach the brackets to the footings with anchor bolts.

4.2.6 The bearing area around the footing must be smooth and level while adjusting the face of the stem wall to vertical at the point of the bracket attachment. The footings may be notched where applicable.

4.2.7 A calibrated Hydraulic Ram utilizing a pump and cylinder with is to be used to drive the pier into the soil.

4.2.8 All the excavated soil at each pier location is to be replaced and compacted after the piers are proof load tested.

4.2.9 If more than one hydraulic pump is being used, do not push two adjacent piers at the same time.

4.3 Special Inspection:

Special Inspection in accordance with 2018, 2015 and 2012 Section 1705.7 of the International Building Code is required for installation of the Grip-Tite® Push Pier System, except as indicated in Section 1704.2 of the IBC. The special inspector must verify the following:

1. Verification of the product manufacturer, installation instruction and the certification of the installer.
2. Product identification, including but not limited to, brackets, bolts and shafts as specified in the construction documents and this evaluation report.
3. The equipment used to install the Grip-Tite® Push Pier System.
4. Inclination and positive / location of the Grip-Tite® Push Piers.
5. Tightness of all the anchor bolt connections.
6. Compliance of the installation with the approved construction documents and this evaluation report.

5.0 CONDITIONS OF USE:

The Grip-Tite® Push Pier System described in this report complies with, or is a suitable alternative to what is specified in, those codes listed in Section 1.0 of this report, subject to the following conditions:

5.1 The Grip-Tite® Push Pier System is manufactured, identified, and installed in accordance with the manufacturers' written installation instructions, the site-specific approved construction documents (Engineering plans and specifications) and this evaluation report. In the event of a conflict between this report, the approved construction documents and / or the manufacturer's installation instructions, the most restrictive governs.

5.2 This evaluation report does not address Seismic loading for this system, existing footing suitability or attachment requirements to existing footings.

5.3 Installation of the hydraulically driven pier systems must be limited to support of uncracked normal-weight concrete as determined in accordance with the applicable code.

5.4 Brackets must be used only to support structures that are laterally braced as defined in Section 1810.2.2 of the IBC.

5.5 Use of the hydraulically driven pier systems in conditions indictive of a potential pier corrosion situation as defined by soil resistivity of less than 1000 ohm-cm, a Ph of less than 5.5, soils with high organic content, sulfate concentrations greater than 1000 ppm, landfills, or mine waste is beyond the scope of this evaluation report.

5.6 The adequacy of the concrete structures that are connected to the brackets of the Grip-Tite® Push Pier System must be verified by a registered design professional in accordance with the applicable code provisions, such as ACI 318-14, Chapter 13 (ACI 318-11, Chapter 15) as referenced in Chapter 18 of the IBC and subject to the approval of the local code official.

5.7 Galvanized and bare steel components are not to be combined in the same system. All push pier components must be galvanically isolated from all concrete reinforcing steel, metal building components and / or structural steel.

5.8 The Grip-Tite® Push Pier System must be installed vertically into the ground with a maximum allowable angle of inclination of one (1) degree.

5.9 All Engineering calculations and drawings as described in Section 1604.4 of the IBC and comply with the design and installation requirements of this evaluation report are to be prepared by a registered design professional. All of these documents are to be submitted and approved by the local code official.

5.10 A geotechnical investigation report along with a site survey for each project site must be provided when requested by the authority having jurisdiction.

5.11 The applied loads must not exceed the allowable capacities as defined in this evaluation report.

5.12 It is the designers' responsibility to verify one-way shear in concrete beam applications.

5.13 Settlement of the Grip-Tite® Push Pier System is beyond the scope of this evaluation report and must be determined by a registered design professional in accordance with Section 1810.2.3 of the IBC.

5.14 The Grip-Tite® Push Pier System spacing shall be limited to 6 ft (1830 mm) unless an alternative spacing is determined by a registered design professional.

5.15 The interaction between the hydraulically driven pile system and the soil is outside the scope of this report.

5.16 The Grip-Tite® Push Pier System is manufactured at the Grip-Tite® Manufacturing Co., LLC, located at 505 E. Madison St., Winterset, IA 50273, under a quality control program with inspections monitored by the ICC-ES.

6.0 EVIDENCE SUBMITTED

Data in accordance with the ICC-ES Acceptance Criteria for Push Pier Foundation Systems (AC517), dated February 2020 (editorially revised September 2021).

7.0 IDENTIFICATION

7.1 Product labeling shall include, the name of the report holder or listee, and the ICC-ES mark of conformity. The listing or evaluation report number (ICC-ES ESR-4891) may be used in lieu of the mark of conformity.

7.2 The report holder's contact information is the following:

GRIP-TITE® MANUFACTURING CO., LLC.
505 E. MADISON STREET
WINTERSET, IOWA 50273
(515) 462-1313
www.griptite.com

TABLE 1—ASD COMPRESION CAPACITY FOR GRIP-TITE® PUSH PIER SYSTEM[2,4,5,7]

BRACKET NUMBER	SHAFT NUMBER	PILING DIAMETER (inches)	ALLOWABLE BRACKET COMPRESSION CAPACITY[1,3] (kips)	ALLOWABLE SHAFT COMPRESSION CAPACITY[6] (kips)
FP3BA	FP3T	3	21.7	30.8

For **SI:** 1 inch = 25.4 mm, 1 kip (1000 lbf) = 4.48 Kn.

[1] Load capacity is based on full scale load tests per AC517 with an installed 5'-0" unbraced pile length having a maximum of one coupling per IBC Section 1810.2.1. Only localized limit states such as mechanical strength of steel components and concrete bearing have been evaluated.

[2] The capacity listed assumes the structure is sidesway braced per IBC Section 1810.2.2.

[3] The tabulated values are based on installation with normal-weight concrete having a minimum compressive strength of 2,500 psi (17.23 MPa).

[4] Installation must comply with Section 4.2 of this report.

[5] Lu=Total unbraced pile length per IBC Section 1810.2.1, including the length in air, water or in fluid soils, and the embedment length into firm or soft soil (non-fluid soil). KLu = total effective unbraced length of the pile, where kLu = 0 represent a fully braced condition in that the total pile length is fully embedded in firm or soft soil.

[6] Tabulated values is based on non corroded condition. For condition based on corrosion loss of bare steel (0.036-inch steel sacrificial thickness) as indicated in Section 3.6 of AC517 for a 50-year service life, the shaft compression allowable capacity shall be reduced to 24 kips.

[7] Registered design professional must determine the soil compression capacity, as indicates in Section 5.15, and used if it controls the design.

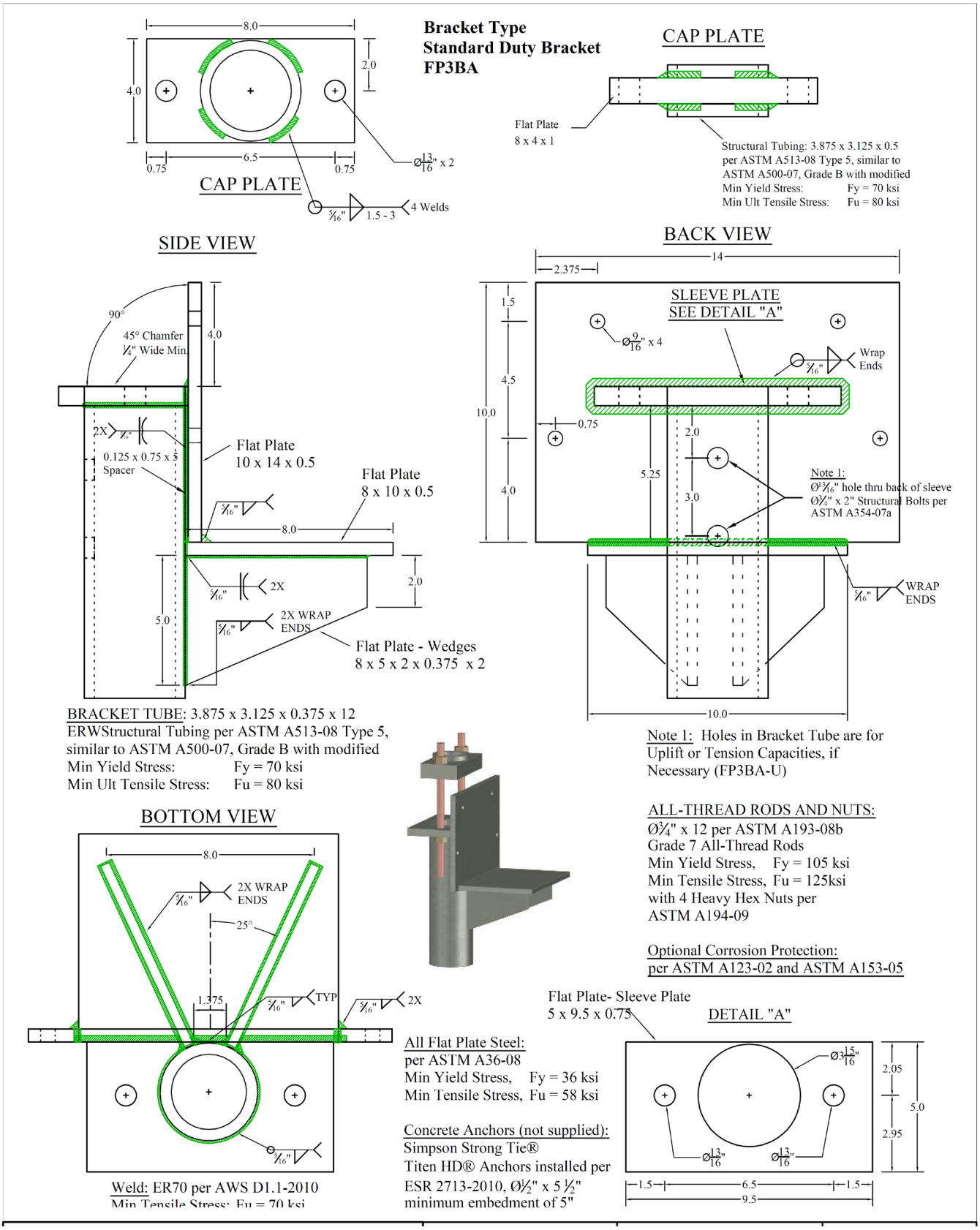

FIGURE 1—GRIP TITE® PUSH PIER SYSTEM BRACKET ASSEMBLY

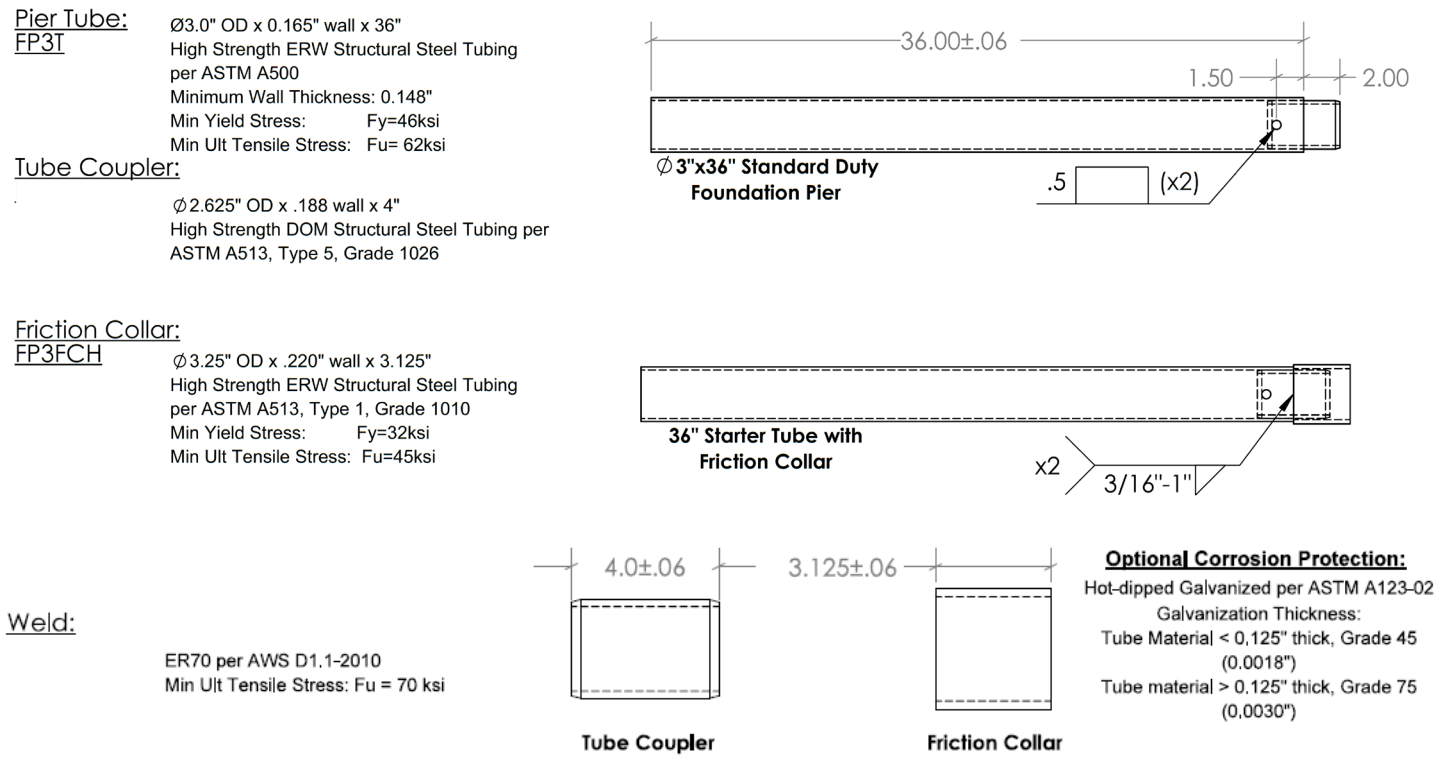

FIGURE 2—GRIP TITE® PUSH PIER SYSTEM PIER TUBES

TABLE 2—MECHANICAL PROPERTIES AFTER CORROSION LOSS[1] OF 3.0-INCH-DIAMETER SHAFT

Mechanical Properties	SHAFT DIAMETER (inches)
	3.0
Steel Yield Strength, F_y (ksi)	46
Steel Ultimate Strength, F_u (ksi)	62
Modulus of Elasticity, E (ksi)	29,000
Nominal Wall Thickness (inch)	0.165
Minimum Wall Thickness (inch)	0.148
Outside Diameter (inch)	2.964
Inside Diameter (inch)	2.706
Cross Sectional Area (inch^2)	1.148
Moment of Inertia, I (inch^4)	1.156
Radius of Gyration, r (inch)	1.003
Section Modulus, S (inch^3)	0.780
Plastic Section Modulus, Z (inch^3)	1.038

For **SI:** 1 inch = 25.4 mm; 1 ksi = 6.89 MPa, 1 ft-lbf =1.36 N-m; 1 lbf =4.45 N.

[1]Dimensional properties are based on bare steel losing 0.036-inch steel thickness as indicated in Section 3.6 of AC517 for a 50-year service life.

DIVISION: 31 00 00—EARTHWORK
Section: 31 63 00—Bored Piles

REPORT HOLDER:

GRIP-TITE® MANUFACTURING CO., LLC

EVALUATION SUBJECT:

GRIP-TITE® PUSH PIER SYSTEM

1.0 REPORT PURPOSE AND SCOPE

Purpose:

The purpose of this evaluation report supplement is to indicate that Grip-Tite® Push Pier System, described in ICC-ES evaluation report ESR-4891, has also been evaluated for compliance with the code*(s)* noted below.

Applicable code edition*(s)*:

2019 *California Building Code* (CBC)

For evaluation of applicable Chapters adopted by the California Office of Statewide Health Planning and Development (OSHPD) AKA: California Department of Health Care Access and Information (HCAI) and the Division of State Architect (DSA), see Sections 2.1.1 and 2.1.2 below.

2.0 CONCLUSIONS

2.1 CBC:

The Grip-Tite® Push Pier System, described in Sections 2.0 through 7.0 of the evaluation report ESR-4891, complies with CBC Chapter 18, provided the design and installation are in accordance with the 2018 *International Building Code*® (IBC) provisions noted in the evaluation report and the additional requirements of CBC Chapters 16, 17, and 18 as applicable.

2.1.1 OSHPD:

The applicable OSHPD Sections and Chapters of the CBC are beyond the scope of this supplement.

2.1.2 DSA:

The applicable DSA Sections and Chapters of the CBC are beyond the scope of this supplement.

This supplement expires concurrently with the evaluation report, reissued August 2024.

ICC-ES Evaluation Reports are not to be construed as representing aesthetics or any other attributes not specifically addressed, nor are they to be construed as an endorsement of the subject of the report or a recommendation for its use. There is no warranty by ICC Evaluation Service, LLC, express or implied, as to any finding or other matter in this report, or as to any product covered by the report.

Copyright © 2024 ICC Evaluation Service, LLC. All rights reserved.