ICC EVALUATION SERVICE
In Cooperation with Innovation RESEARCH LABS

ICC Evaluation Service, LLC
Western Regional Office
3060 Saturn Street, Suite 100
Brea, CA 92821
t: 1.800.423.6587, ext. 1
f: 562.695.4694
www.icc-es.org

August 20, 2019

TO: **PARTIES INTERESTED IN ADHESIVE ANCHORS IN MASONRY ELEMENTS**

SUBJECT: Proposed Revisions to the Acceptance Criteria for Adhesive Anchors in Masonry Elements, Subject AC58-1019-R1 (HS/VC).

Hearing Information:
Tuesday, October 8, 2019
8:00 am
The Westin Birmingham
2221 Richard Arrington Jr. Blvd.
Birmingham, AL 35203
(205) 307-3600

Dear Colleague:

You are invited to comment on proposed revisions to AC58, which will be discussed at the Evaluation Committee hearing noted above. The proposed revisions to the criteria are based on a letter and criteria draft received from the Concrete and Masonry Anchor Manufacturers Association (CAMA), dated June 11, 2019, developed in conjunction with ICC-ES staff participation in the CAMA task group on AC58.

The changes are extensive, as evidenced by changes to the title and scope of the criteria. The proposal includes a new differentiation between use of adhesive anchors in cracked masonry in structures assigned to Seismic Design Category (SDC) C, D, E, and F and uncracked masonry in structures assigned to SDC A and B. CAMA's proposal letter is attached. The reformatted draft of the acceptance criteria from ICC-ES staff does not show any tracked changes to the current AC58, but is presented as a new draft for clarity.

The CAMA letter includes a list of objectives for the proposed revision, including:

1. Adoption of a strength design procedure for adhesive anchors in masonry.
2. Inclusion of the effects of cracking in masonry walls on anchor behavior.
3. Inclusion of seismic testing in cracked masonry.
4. Adoption of confined tension testing procedures.
5. Complete definition of the masonry types included in the criteria.

CAMA has indicated that the proposed k-factor for masonry breakout in tension, reduced from the value used in concrete, may be revisited in the future with additional test data provided by CAMA to substantiate any increase in the factor.

In general, the proposed revisions bring AC58 in line with the testing and assessment procedures used for adhesive anchors in concrete in AC308, including the provisions for converting strength design values to allowable stress design values (ASD). The proposed design provisions also emulate those in ACI 318 for concrete. CAMA also notes that the Masonry Institute of America (MIA) and The Masonry Society (TMS) were consulted extensively in the development of the revision. ICC-ES staff welcomes comments from industry regarding the addition for evaluating adhesive anchors in cracked masonry, and the added requirement for SDC C through F to assume the masonry is cracked unless it can be demonstrated that the masonry remains uncracked for anchor design tensile strength for resisting earthquake forces.

The proposed draft of AC58 from ICC-ES staff is shown in a standard ICC-ES acceptance criteria draft format, and therefore differs from the CAMA proposal, although primarily only editorially. These changes include relocating and/or renumbering sections and reference to other ICC documents. These changes include, but are not limited to:

1. Relocate Section 2.1 to Section 1.4.
2. Relocate Section 2.2 to Section 1.5.
3. Relocate Section 4.8.1 to Section 2.3.3.
4. Relocate Section 4.8.2 to Section 2.4.
5. Relocate all of the contents of Section 5 to various parts in Section 2, and renumber Sections 6 through 9 accordingly.
6. Relocate Section 11 to Section 2.
7. Relocate the quality control requirements from Section 12 to Section 9.
8. Renumber duplicate section numbering starting at 3.3.2.1 under Table 3.2, beginning with new number 3.3.2.7, and update Table 3.1 accordingly.

One technical addition from ICC-ES staff was to add a minimum embedment depth for adhesive anchors in masonry of 1-$^{5}/_{8}$-inches in Section 1.2 to be consistent with the requirements in ACI 355.4-11.

In their letter, CAMA proposes a data submittal date be established for two (2) years after approval of the proposed changes by the evaluation committee. Should the committee approve the proposed revisions to the criteria, in order to allow reports holders and ICC-ES staff sufficient time to provide data and publish reports, the ICC-ES staff will recommend a data submittal date of **November 15, 2021**, and a mandatory compliance date of **November 15, 2022**.

This means that existing report holders, under this criteria, will need to show their compliance with the new provisions before the compliance date, or face mandated revisions or suspension or cancellation of their reports. Data packages will need to be accompanied by an application, along with appropriate fees, including significant technical review and additional item fees as applicable. No evaluation reports will be issued using the current AC58 provisions once the compliance date has passed.

You are invited to submit written comments on this or any other agenda item, or to attend the Evaluation Committee hearing and present your views in person. If you wish to contribute to the discussion, please note the following:

1. Regarding written comments and presentations:

   a. You should submit these via e-mail to es@icc-es.org or by U.S. mail to the Western Regional (Brea) office to be received by the applicable due date.

   b. Comments are to be received by **September 10, 2019.** These written comments will be forwarded to the committee before the meeting, and will also be posted on the ICC-ES web site shortly after the deadline for submission. Written comments that are not submitted by this deadline will not be considered at the meeting.

   c. Rebuttal comments, from the proponent noted in this letter, are to be received by **September 19, 2019**. They will be forwarded to the committee before the meeting, and will also be posted on the ICC-ES web site shortly after the deadline for submission. Written rebuttal comments that are not submitted by the deadline will not be considered at the meeting.

   d. Visual presentations, in PowerPoint format only, are to be received by **September 19, 2019**. These will be forwarded to the committee before the meeting, and will also be posted on the ICC-ES web site shortly after the deadline for submission. Presentations that are not submitted by the deadline cannot be viewed at the meeting. Note: Videos will not be posted on the web site.

      Presentations will be retained with other records of the meeting. It is the presenter's responsibility, prior to the presentation, to verify with ICC-ES staff that the presentation files have been transferred satisfactorily to the presentation computer.

   e. ICC-ES will post to the web site, on **October 4, 2019,** memos by the ICC-ES staff, responding to the previously received public comments.

   f. If you miss the deadlines for submission of written comments and visual presentations, your verbal comments can be presented at the meeting.

   g. Proposed criteria, written public comments, visual presentations, and responses by ICC-ES staff will be available at the meeting on a limited number of CDs for uploading to computers. ICC-ES will not provide any printed copies.

2. Regarding verbal comments and presentations:

Please plan to speak for not more than ten minutes. As noted above, visuals must be in PowerPoint format. We have a computer, projector, and screen available to those making visual presentations. It is the presenter's responsibility, prior to their presentation, to verify with ICC-ES staff that presentation files have been satisfactorily transferred to the presentation computer.

3. Keep in mind that all materials submitted for committee consideration are part of the public record and will not be treated as confidential. It is the presenter's responsibility to certify to ICC-ES staff that no materials infringe copyright.

4. Please do not communicate with committee members before the meeting about any items on the agenda.

We appreciate your interest in the work of the Evaluation Committee. If you have any questions, please contact me at (800) 423-6587, extension 3996, or Vincent Chui, P.E., S.E., at extension 3224. You may also reach us by e-mail at es@icc-es.org.

Yours very truly,

Howard Silverman, P.E.
Senior Staff Engineer

HS/raf

Encl.

cc: Evaluation Committee

CONCRETE AND MASONRY ANCHOR MANUFACTURERS ASSOCIATION

Thomas Associates
Executive Director

June 11, 2019

Vincent Chui
ICC Evaluation Services, LLC.
Western Regional Office
3060 Saturn Street, Suite 100
Brea, CA 92821

Via Email: vchui@icc-es.org

SUBJECT: Proposal for Revision of AC58 – Acceptance Criteria for Adhesive Anchors in Masonry Elements

Dear Vincent,

We hereby submit a proposal for revision of AC58 – Acceptance Criteria for Adhesive Anchors in Masonry Elements.

This revision accomplishes the following objectives:

1. Adoption of a strength design procedure for adhesive anchors in masonry.
2. Inclusion of the effects of cracking in masonry walls on anchor behavior.
3. Inclusion of seismic testing in cracked masonry.
4. Adoption of confined tension testing procedures.
5. Complete definition of the masonry types included in the criteria.

This document is the product of extensive work and research conducted by the Concrete and Masonry Anchor Manufacturers Association over the past four years. It is the first step in addressing long-standing deficiencies in the criteria for the assessment of anchors in masonry and brings AC58 in line with procedures used to test and assess anchors in concrete under, e.g., AC308.

The revision addresses four types of masonry construction

a) fully-grouted and reinforced concrete masonry walls constructed with closed-ended and open-ended masonry units
b) partially-grouted reinforced concrete masonry walls
c) ungrouted concrete masonry walls
d) solid and hollow brick construction, e.g., as used for facing brick

1300 Sumner Ave Cleveland, Ohio 44115 USA (T) +1 216-241-7333 (F) +1 216-241-0105
info@concreteanchors.org www.concreteanchors.org

We believe that these masonry construction types address the large majority of applications in the U.S. However, inclusion of additional masonry construction types should pose no great difficulty if the need arises.

We have consulted extensively with the Masonry Institute of America and The Masonry Society in the development of this revision.

Assuming the Committee adopts our proposal, we recommend that a period of two (2) years be established from the date of adoption for the submission of test reports and data conforming to the AC58 revision. Within that time, we recommend that report holders be permitted to renew reports under the existing AC58. We further recommend that new applicants be advised that their testing and assessment should conform to the AC58 revision.

Please do not hesitate to contact us directly with any questions you may have.

Sincerely,

CRAIG H. ADDINGTON

CHA/jlb
cama
Attachment

ICC EVALUATION SERVICE, LLC, RULES OF PROCEDURE FOR EVALUATION REPORTS

1.0 PURPOSE

These rules set forth procedures governing ICC Evaluation Service, LLC (ICC-ES), issuance, maintenance and renewal of evaluation reports on building materials and products, methods of construction, prefabricated building components, and prefabricated buildings.

ICC-ES evaluation reports assist those enforcing model codes in determining whether a given subject complies with those codes. An evaluation report is not to be construed as representing a judgment about aesthetics or any other attributes not specifically addressed in the report, nor as an endorsement or recommendation for use of the subject of the report. Approval for use is the prerogative and responsibility of the Code Official; ICC-ES does not intend to assume, nor can ICC-ES assume, that prerogative and responsibility.

2.0 BASIS OF EVALUATION

Evaluation of data is based on one or more of the published editions of the following model codes

- International Codes
- National Codes
- Standard Codes
- Uniform Codes
- Other codes as designated by the ICC-ES president

Additionally, evaluation of data will be based on applicable ICC-ES acceptance criteria.

Where the provisions of the applicable codes prohibit a particular material, product, or method of construction, ICC-ES will not consider development of a new evaluation report and will so advise the applicant. When this occurs with regard to an existing evaluation report, the report holder will be advised that the existing evaluation report cannot be reissued.

An evaluation report advising of compliance with only the *International Residential Code for One- and Two-Family Dwellings®* (IRC) can be issued if it is specified in the report that the subject of the report has been evaluated for use only in one- and two-family dwellings.

3.0 APPLICATIONS

Applications for new reports and for revisions to existing reports shall be filed on forms provided for those purposes. Applications shall be accompanied by one complete set of plans, details, calculations, and other supporting data which fully describe the subject of the application and substantiate its performance as being in compliance with the applicable model codes, and ICC-ES acceptance criteria when these apply. The data shall also include details of the applicant's quality control program in sufficient detail to verify that the manufacturer's quality system ensures the manufactured product will not change from the product described in the original qualifying data. Fees noted in the ICC-ES fee schedule must be submitted with applications.

An application may be filed only by the entity having rights to the materials, products, or methods of construction on which an evaluation report is sought. The applicant must have legal rights to all evidence and data.

An application for a new evaluation report is considered valid for the life of the evaluation report.

Evaluation reports may be revised when requested by the report holder, or when revision is required by the applicable acceptance criteria or upon prior notice by ICC-ES. When revision is required, ICC-ES will provide prior notice and will include the date by which the report must be reissued. Whether revision is requested by the report holder or required by ICC-ES, an application must be filed for each revision.

Where products to be covered in an evaluation report include a proprietary component (a specific material that is manufactured by a party, other than the ICC-ES report applicant, that is referenced by name in the evaluation report; or a material that forms part of a fabricated assembly produced by the ICC-ES report applicant), rights to use the applicable data are required in accordance with the ICC-ES Policy on Proprietary Components. In some cases, per the Policy on Proprietary Components, the manufacturer of the proprietary component may be required to obtain an evaluation report before ICC-ES will issue a report which names the proprietary component in its text.

Any manufacturer or distributor other than the applicant that is to be listed in the evaluation report may be included as an additional listee upon submission of additional-listee forms and payment of required fees by the applicant. The applicant shall furnish ICC-ES with the name and address of each listee and shall notify ICC-ES when to add or delete a listee. Data must be submitted to verify the acceptability of each listee.

The report holder may authorize the issuing of a separate evaluation report under the name of a distributor (also known as a private label applicant). A separate evaluation report application prepared by the private label applicant and a completed Application for Private Label Listing Evaluation Report form shall be submitted. The private label evaluation report shall be inextricably linked to the master report holder's report (also referred to as the master report). Any relevant information in the master

report, whether in conjunction with first issuance of the report or in subsequent revisions, shall be included in the private label report. The private label report shall have the same renewal date as the master report. An application for revision of the private label report shall be made when revisions relevant to the private label report are made to the master report.

Applications for new evaluation reports that are held for more than 30 days without receipt of the basic fee or supporting documentation may be closed out, unless such term is extended by the ICC-ES president or his designated representative.

4.0 DATA TO BE SUBMITTED IN SUPPORT OF EVALUATION REPORTS

4.1 Applications for new reports and for revisions to existing reports shall be submitted with information as noted in Section 3.0 of these rules. Where data consists of calculations, plans, and specifications developed through the practice of architecture or engineering, the documents containing such data shall be sealed by a registered design professional.

4.2 Where data consists of reports of laboratory tests, such tests shall be performed at the expense of the applicant by a testing laboratory complying with ISO/IEC Standard 17025. Testing laboratories must be accredited by an accreditation body that is a signatory to the International Laboratory Accreditation Cooperation Mutual Recognition Arrangement (ILAC MRA). The scope of the laboratory's accreditation shall include the type of testing that is to be reported to ICC-ES.

Reports from nonaccredited laboratories may be accepted by ICC-ES for the processing of a specific evaluation report upon submission of evidence (including evidence from an on-site assessment conducted by an authorized ICC-ES representative) that the laboratory is an independent, qualified laboratory conforming to ISO/IEC Standard 17025 for the work in question.

4.3 In addition to the data noted in Sections 4.1 and 4.2, applications for recognition of prefabricated building components and prefabricated buildings must be supported by plans and specifications that include all facets of the construction, differentiating between field- and factory-installed items. The data must include, when applicable, detailed plans on wiring, plumbing, and mechanical systems, including equipment lists as well as schematics.

4.4 Applicants shall submit detailed quality documentation, meeting ICC-ES requirements, for the product or building system and the manufacturer's plant. Revisions to the quality documentation must be submitted to and approved by ICC-ES in conjunction with changes to the evaluation report content.

4.5 Whenever required, factory inspections shall be performed by ICC-ES representatives. Any third-party agency representing ICC-ES for purposes of inspections must have a contract with ICC-ES, and must be accredited by a signatory to the ILAC MRA as complying with ISO/IEC Standard 17020. Costs associated with inspections shall be borne by the applicant.

4.6 The facilities designated to manufacture the products covered in the report must be inspected before the report can be issued. See Section 9.0 of these rules for information concerning inspections.

4.7 ICC-ES may require the applicant to conduct further tests and/or provide additional information considered relevant to the evaluation.

4.8 Additional listings necessitate submission of information the same as set forth above as applicable to the report holder.

5.0 ISSUANCE OF AN EVALUATION REPORT

ICC-ES will review the data submitted; establish a scope of work; work with the applicant to develop new or revised acceptance criteria (when this is necessary); request any additional information necessary to evaluate the product in accordance with the scope of work; prepare a draft report; secure applicant review; and prepare a final report for approval by the applicant and ICC-ES, provided ICC-ES requirements, as communicated in staff letters, have been met.

The applicant will be notified when the evaluation report is made available to the public through the ICC-ES web site. See Section 13.0 of these rules for permitted uses of evaluation reports.

6.0 FEES

6.1 General:

6.1.1 ICC-ES application and renewal fees are nonrefundable unless a refund is authorized by the president or his designated representative. Each item covered in the report, as determined by ICC-ES, has a fee as set forth in the fee schedule. All fees shall be paid in U.S. funds drawn from a U.S. bank.

6.1.2 Where products covered by an evaluation report are distributed or manufactured by other companies and the products are labeled with the evaluation report number or otherwise represented as covered by the evaluation report, such other companies' names shall appear on the evaluation report as listees, and a fee will be charged for each listee as set forth in the fee schedule.

6.1.3 Where products to be covered in an evaluation report include proprietary components, item and listee fees, per the ICC-ES fee schedule, may be applicable. In some cases, per the ICC-ES Policy on Proprietary Components, the manufacturer of the proprietary component may be required to obtain an evaluation report before ICC-ES can issue a report which names the proprietary component in its text.

6.1.4 The basic fee covers the dissemination and maintenance of one page of a report via the ICC-ES web site, and recognition under one code. Fees for individual items, and additional pages, codes, etc., will be assessed as set forth in the ICC-ES fee schedule.

6.1.5 When an applicant submits test reports from a nonaccredited laboratory, fees for reviewing the qualifications and independence of the laboratory (including the costs of an on-site assessment by IAS or an authorized ICC-ES representative) shall be applicable as set forth in the ICC-ES fee schedule.

6.1.6 The fees for private label evaluation reports shall be as set forth in the fee schedule.

6.2 New Report Application:

6.2.1 Each new report application shall be accompanied by the basic fee set forth in the most recent ICC-ES fee schedule. Upon completion of the evaluation, the applicant will be invoiced for any additional fees (page costs, additional listees, individual items, inspections, etc.) beyond the basic fee, with the additional fees to be determined using the then-current ICC-ES fee schedule.

6.2.2 The new evaluation report shall be valid for one year from the date of issue.

6.2.3 Applications under consideration for more than three years without the issuance of an evaluation report are subject to additional fees or to closure, as determined by the president or his designated representative.

6.3 Renewing Evaluation Reports:

Each year, a fee, as set forth in the fee schedule, will be assessed to extend the recognition of the evaluation report for one or two years, as determined by the report holder. Notice will be sent to the report holder a minimum of 60 days in advance of the renewal date. Payment must be received on or before the renewal date.

6.4 Revising Evaluation Reports:

6.4.1 The report holder may request revision of a report at any time after it is issued. An application and fee shall be submitted. The basic revision fee is nonrefundable unless a refund is authorized by the president or his designated representative.

6.4.2 An application for revision, and appropriate fees, must be filed when the report needs revision to comply with a newer edition of the codes or an acceptance criteria.

7.0 NOTIFICATION TO ICC-ES, AND REQUIRED CHANGES TO REPORTS

Report holders must notify ICC-ES prior to modifying products covered by evaluation reports (modifications would include, for example, significant changes in the formulation, the manufacturing process, or the quality control program), or when a significant change occurs regarding the report holder (such as a company name change, change of address, change of ownership, change in legal status, or addition/deletion of a listee). When there are changes affecting the product or the report holder, and when deemed necessary by ICC-ES, the report holder must discontinue use of the report, with reference to the product in question, until the report holder has applied for and secured a report revision.

When there is a change in the conditions under which a report was originally issued (e.g., a change in code requirements, acceptance criteria and/or ICC-ES rules or policy) that affects the report, the report holder will be notified.

8.0 PRODUCT IDENTIFICATION

Products shall be identified as specified in the applicable ICC-ES evaluation report. At a minimum, the method of identification shall include the report holder's name, the product name (if any), and the evaluation report number (ESR-xxxx). The report holder's registered trademark or registered logo is permitted in lieu of the report holder's name when a facsimile of the registered trademark or registered logo is included in the evaluation report. The evaluation report may require additional identification provisions when required by the code or the applicable ICC-ES acceptance criteria. In no case shall the evaluation report number be the only method of identification. The ICC-ES mark and/or the evaluation report number shall be applied only to materials or products which comply with the current evaluation report.

All prefabricated buildings and components shall be identified with the evaluation report number, the ICC-ES mark, and the name and address of the manufacturer. Additionally, for prefabricated buildings and similar structures, the identification shall be serialized to correspond with plant inspection records and to note essential characteristics of the structure (such as design loadings, or wiring, plumbing or building limitations), and the code official shall be provided with a certificate of conformance. The certificate shall be signed by a representative of the manufacturer, and shall certify that the building has been constructed and inspected in accordance with the terms of the evaluation report.

Products, prefabricated buildings and components, and similar items that have been evaluated only for conformance with the IRC, as permitted in Section 2.0, shall also be labeled "For Use in One- and Two-Family Dwellings Only," as outlined in the evaluation report.

Electronic labeling may be used in lieu of the ICC-ES mark of conformity or report number. Examples of electronic labeling are the ICC-ES web address (www.icc-es.org); specific URL related to the report; or the ICC-ES machine-readable code placed on the aforementioned items.

9.0 INSPECTIONS OF MANUFACTURERS, AND EXPENSE REIMBURSEMENT

As a condition of an ICC-ES evaluation report, the applicant grants the ICC-ES staff, or authorized representatives of ICC-ES, the right to conduct inspections of the manufacturing facility and to collect samples, to verify compliance with the evaluation report and applicable ICC-ES Rules of Procedure and Acceptance Criteria 10, as may be amended from time to time.

For initial applications, and applications where new products or new manufacturing facilities are being added to an existing report, evaluation reports will be issued only after an ICC-ES representative has performed a qualifying inspection at the facilities designated to manufacture products under the report. The purpose of the inspection is to determine whether the manufacturer's quality system has been successfully implemented, and provides assurance that, after the report is issued, the manufactured product will not change from the product described and recognized in the evaluation report.

In addition to the qualifying inspection, either ongoing follow-up or annual inspections are required. The inspections are intended to verify the effectiveness of the quality system and continued compliance with the evaluation report, and are subject to fees as provided in the ICC-ES fee schedule.

Where applicable acceptance criteria require more than four inspections per year at the manufacturing facilities, there shall be at least one inspection annually that

involves reporting on a form specifically provided by ICC-ES for purposes of verifying the effective implementation of the quality system. This activity is subject to fees as provided in the ICC-ES fee schedule.

When an ICC-ES representative is required to witness tests, conduct field investigations or investigate complaints related to an evaluation report, all relevant travel expenses and time shall be reimbursed by the applicant. Expenses for testing related to investigations by the ICC-ES staff or for maintaining ongoing quality control compliance shall also be reimbursed by the applicant.

10.0 REVOCATION OR MODIFICATION WITH RIGHT TO A HEARING.

10.1 Any evaluation report, and the authorization to use the report number and the ICC-ES mark, or the ICC-ES- machine-readable code, may be revoked or modified for cause. "Cause" shall include: repeated failure of the material, method of construction or equipment to conform with the specifications upon which the evaluation report was based; repeated failure of the material, method of construction or equipment to perform properly although meeting the specifications upon which the evaluation report was originally based; failure to comply with any condition to the issuance of the evaluation report; any misstatement, whether intentionally or unintentionally made, in the application or in any data submitted in support thereof; failure to comply with any provision of the application form; failure to pass any test required by ICC-ES; failure to comply with new, existing, or revised acceptance criteria; or any other grounds considered as adequate cause in the judgment of ICC-ES.

10.2 Before ICC-ES revokes or modifies any evaluation report, the report holder shall be given reasonable notice and an opportunity to file an appeal pursuant to the ICC-ES Rules of Procedure for Appeals Concerning Evaluation Reports.

11.0 REVOCATION/CANCELLATION/SUSPENSION WITHOUT RIGHT TO A HEARING

11.1 An evaluation report may be canceled upon ICC-ES's receiving a written request to do so from the report holder. A file for a new evaluation report may be closed upon receipt of a written request from the applicant.

11.2 Notwithstanding anything in these rules to the contrary, any evaluation report or additional listing may be suspended for a period not to exceed 90 days, revoked, or canceled by the ICC-ES president or his designated representative, without notice or a hearing, for any of the following reasons: required fees having not been received by ICC-ES within 30 days from the date of mailing by ICC-ES of a written demand for payment; failure of the report holder or listee to maintain a current quality control program; failure to perform any test, or furnish any material or data, required by ICC-ES within the specified time limit, unless extended by the ICC-ES president or his designated representative; receipt of information that the product has been modified in violation of Section 7.0 of these rules; denial of ICC-ES access to manufacturing facilities for purposes of inspecting and evaluating quality control procedures; or failure to comply with any rule for maintaining evaluation reports as adopted or amended from time to time by ICC-ES.

11.3 Notwithstanding anything in these rules to the contrary, any evaluation report or additional listing may be suspended by action of the ICC-ES Board of Managers for such period or periods as the Board determines, without notice or a hearing, for the following reason: failure of the product, material, method of construction or equipment to perform properly or conform with the specifications upon which the evaluation report was based, either condition presenting a threat to public safety or property.

12.0 PROPRIETARY DATA

Data in any evaluation report file or application file is considered proprietary. The data is only disclosed externally by ICC-ES upon written consent of the applicant or, with notice to the applicant, pursuant to a subpoena issued by a court or other governmental agency of competent jurisdiction. Proprietary data may also be disclosed internally to an Evaluation Committee member; a staff member of ICC-ES or ICC, or an authorized representative of ICC-ES or ICC having a legitimate interest therein; any member of the ICC-ES Board of Managers; or any duly identified representative of any testing agency or like organization that initially prepared the data, or a duly authorized representative thereof stated to be an employee or principal thereof having a legitimate interest therein. Additionally, upon the written consent of the applicant, any Governmental Member of ICC may be granted access in the interest of public safety or preservation of property as it relates to enforcement of building laws.

From time to time, ICC-ES records and files are audited on a random basis to establish conformance with international accreditation and conformity assessment standards. It is understood that, by executing an evaluation report application, report holders grant ICC-ES the authority to allow such access.

13.0 PERMITTED USE OF EVALUATION REPORTS AND THE ICC-ES NAME, MARK AND REPORT NUMBER

13.1 Report holders must comply with these Rules of Procedure in their use of the ICC-ES name, mark, ICC-ES machine-readable code, their ICC-ES evaluation report number, the evaluation report itself, and any communications associated with the evaluation report. If it is determined that identification is being applied to materials or products that do not comply with the current evaluation report, applied before authorization or applied after a report has been closed, ICC-ES will immediately disseminate a notice of violation of the ICC-ES Rules of Procedure and take any and all actions necessary to secure compliance.

13.2 No listee shall use the ICC-ES evaluation report number until authorized by ICC-ES.

13.3 The then-current evaluation report, as available on the ICC-ES web site, may be reproduced in its entirety by the report holder in the report holder's literature, advertising, or promotional materials. No reference to ICC-ES, the evaluation report, the ICC-ES mark, or the ICC-ES machine-readable code shall be included with such reproduction in a manner which could be misleading.

13.4 In lieu of reproducing the entire evaluation report in specifications, literature, advertising, or promotional

materials, the report holder may use references and statements such as: "See ICC-ES Evaluation Report No. _____ (insert current number) at www.icc-es.org"; and/or the ICC-ES machine-readable code. It is the report holder's responsibility not to misrepresent the evaluation report in any way, and not to use the report in such a manner as to bring ICC-ES into disrepute; and to secure ICC-ES approval in advance whenever there is a question about the use of the ICC-ES name and/or ICC-ES evaluation report. Report holders are expressly prohibited from using the ICC-ES name, mark, ICC-ES machine-readable code, or report number to claim or imply product recognition beyond the recognition specified in the evaluation report. Report holders are also expressly prohibited from using, in advertising, promotional, and informational materials, any language that would likely mislead the public about their evaluation reports. ICC-ES reserves to itself the right to interpret what would constitute misleading language.

13.5 The following provisions govern the use of the ICC-ES mark and ICC-ES machine-readable code on products and in advertising, promotional, and informational materials:

13.5.1 Use of the ICC-ES mark and ICC-ES machine-readable code is prohibited in any manner and in any media without authorization from ICC-ES. Use of or reference to any evaluation report after cancellation is also prohibited.

13.5.2 The ICC-ES mark and ICC-ES machine-readable code may be used only on or in connection with products, components, methods, and materials that are covered in currently valid evaluation reports. Use of the mark and ICC-ES machine-readable code is not a replacement or substitute for product identification provisions in the relevant evaluation report. In no circumstances may the mark and ICC-ES machine-readable code be used to imply ICC-ES approval of aesthetics or any other attributes not specifically addressed in the report.

13.5.3 The use of the ICC-ES mark and ICC-ES machine-readable code must include the relevant evaluation report number.

13.5.4 The mark and ICC-ES machine-readable code may not be altered in any way, although it may be enlarged or reduced. Black is the basic color of the mark and the ICC-ES machine-readable code. Other colors may be used only when authorized in writing by ICC-ES.

13.5.5 It is the responsibility of the mark and ICC-ES machine-readable code user not to misrepresent in any way the status, conditions, or terms of the relevant ICC-ES evaluation report. It is also the user's responsibility to secure ICC-ES approval in advance whenever there is a question about how the ICC-ES mark and ICC-ES machine-readable code, and/or name is to be used.

13.6 The above does not excuse compliance with any ICC-ES requirement as a condition of securing or maintaining an evaluation report requiring identification, reference to standards or inspection, or other information to be affixed to or labeled upon products.

13.7 Violation of these rules, regarding the use of the ICC-ES name and mark, ICC-ES machine-readable code, reports and report numbers, as determined by ICC-ES, must cease immediately upon notification of the violator by ICC-ES. Failure to respond to the notification may lead to suspension or revocation of the report under these rules. ICC-ES also reserves the right to note violations in the public notices and publications of ICC-ES and its parent company, ICC, and on the ICC-ES web site.

14.0 COMPLAINT PROCEDURE

All complaints related to an evaluation report should be submitted in writing to the attention of the ICC-ES Quality System Director, accompanied by a filing fee of $5,000. The report holder will be notified of the complaint and, if a response is needed to address the complaint, ICC-ES will so inform the report holder. After notice, the report holder will have 30 calendar days in which to respond, or the evaluation report in question will be subject to cancellation.

15.0 APPEALS

For details on appeals, see the ICC-ES Rules of Procedure for Appeals Concerning Evaluation Reports.■

Revised: January 28, 2019

PROPOSED REVISIONS TO THE ACCEPTANCE CRITERIA FOR ADHESIVE ANCHORS IN CRACKED AND UNCRACKED MASONRY ELEMENTS

AC58

Proposed August 2019
Proposed compliance date - November 15, 2022

Previously approved March 2018, November 2015, May 2012, October 2011, June 2011, December 2009, December 2006, June 2005, February 2005, November 2001, January 2001, July 2000, January 1999, January 1998, September 1997, April 1995, January 1995

(Previously editorially revised August 2013)

PREFACE

Evaluation reports issued by ICC Evaluation Service, LLC (ICC-ES), are based upon performance features of the International family of codes. (Some reports may also reference older code families such as the BOCA National Codes, the Standard Codes, and the Uniform Codes.) Section 104.11 of the *International Building Code*® reads as follows:

> **The provisions of this code are not intended to prevent the installation of any materials or to prohibit any design or method of construction not specifically prescribed by this code, provided that any such alternative has been approved. An alternative material, design or method of construction shall be approved where the building official finds that the proposed design is satisfactory and complies with the intent of the provisions of this code, and that the material, method or work offered is, for the purpose intended, at least the equivalent of that prescribed in**

ICC-ES may consider alternate criteria for report approval, provided the report applicant submits data demonstrating that the alternate criteria are at least equivalent to the criteria set forth in this document, and otherwise demonstrate compliance with the performance features of the codes. ICC-ES retains the right to refuse to issue or renew any evaluation report, if the applicable product, material, or method of construction is such that either unusual care with its installation or use must be exercised for satisfactory performance, or if malfunctioning is apt to cause injury or unreasonable damage.

Acceptance criteria are developed for use solely by ICC-ES for purposes of issuing ICC-ES evaluation reports.

ICC EVALUATION SERVICE® and ICC-ES® (and their associated logos) are registered trademarks and service marks of ICC Evaluation Service, LLC, and INTERNATIONAL CODE COUNCIL®, ICC®, INTERNATIONAL BUILDING CODE® and IBC® (and their associated logos) are registered trademarks and service marks of its parent company, International Code Council, Inc.

No portion of this acceptance criteria (AC58) may be copied, reproduced, reprinted, republished, distributed, transmitted, or modified in any form or manner without the express prior written permission of ICC-ES. Any request for such permission should be addressed to ICC-ES at 3060 Saturn Street, Suite 100, Brea, California 92821. Any of the foregoing expressly authorized by ICC-ES must include all the copyright, trademark, service mark and other proprietary rights notices contained herein.

Copyright © 2019 ICC Evaluation Service, LLC. All rights reserved.

PROPOSED REVISIONS TO THE ACCEPTANCE CRITERIA FOR ADHESIVE ANCHORS IN CRACKED AND UNCRACKED MASONRY ELEMENTS (AC58)

1.0 INTRODUCTION

1.1 Purpose: The purpose of this acceptance criteria is to establish requirements for adhesive anchors in masonry elements to be recognized in an ICC-Evaluation Service, LLC (ICC-ES), evaluation report under the 2018, 2015, 2012, 2009, and 2006 *International Building Code*® (IBC), and the 2018, 2015, 2012, 2009, and 2006 *International Residential Code*® (IRC). Basis of recognition are IBC Section 104.11, and IRC Section R104.11. The reason for the development of these criteria is to provide guidelines for the evaluation of alternative anchors to those addressed by the code (IBC or IRC).

1.2 Scope: Anchors evaluated under this criteria are alternatives to anchors addressed in Section 8.1.3 of TMS 402-16 and TMS 402-13/ACI 530-13/ASCE 5-13 (Section 2.1.4 of TMS 402-11/ACI 530-11/ASCE 5-11) referenced in Section 2107.1 of the IBC and Section R301.1.3 of the IRC. This criteria includes provisions for evaluating anchors both in masonry that is assumed to remain uncracked for the service life of the anchor and in masonry that may experience cracking over the service life of the anchor. Anchor elements shall be composed of steel and are typically threaded rod, reinforcing bars, or internally threaded inserts used either with, or without, metallic or non-metallic screen tubes. This acceptance criteria applies to anchors with diameters, d_a, between $^1/_4$-inch and 1 inch that are to be installed into drilled holes that are approximately cylindrical with a diameter $d_o \leq 1.5d_a$. Anchors installed in grouted

concrete masonry cells (e.g. top of wall) shall have an embedment into the grout of not less than 3 inches (76 mm); anchors installed elsewhere shall have an embedment not less than 1-$^{5}/_{8}$ inches (41 mm). Table 1.1 summarizes the various masonry materials / construction types that are within the scope of this acceptance criteria under which the applicant can choose to have the anchors evaluated.

1.2.1 This acceptance criteria references sections, tables, and figures in both this acceptance criteria and ACI 318, with the following method used to distinguish between the two document references:

- References to sections, tables, and figures originating from ACI 318 are *italicized*, with the leading reference corresponding to 318-14 and the parenthetical reference corresponding to 318-11. For example, Section 2.2 in ACI 318-14, which is analogous to Section D.1 in ACI 318-11, will be displayed as *ACI 318 Section 2.2 (Section D.1)*.
- References to sections, tables, and figures originating from the current document do not have any special font treatment, for example Section 3.2.2.2.

TABLE 1.1—EVALUATION CATEGORIES

Masonry conforming to	Construction types	Qualification	Possible anchor locations	Design
ASTM C90 - Loadbearing concrete masonry units (CMU)	Fully grouted CMU, uncracked only	Table 4.1	A, B, C*, D, E*, F, G	*ACI 318-11/14* amended by Section 3.3 (LRFD) and Section 3.7 (ASD)
ASTM C90 - Loadbearing concrete masonry units (CMU)	Fully grouted CMU, cracked and uncracked	Table 4.2	A, B, C*, D, E*, F, G	*ACI 318-11/14* amended by Section 3.3 (LRFD) and Section 3.7 (ASD)
ASTM C90 - Loadbearing concrete masonry units (CMU) ASTM C129 - Nonloadbearing concrete masonry units (CMU)	Ungrouted hollow CMU	Table 4.3	A, B, D, G	Section 3.4 (LRFD) Section 3.7 (ASD)

ASTM C90 - Loadbearing concrete masonry units (CMU)	Partially grouted CMU, uncracked only	Table 4.1 Table 4.3	A, B, C*, D, E*, F, G	*ACI 318-11/14* amended by Section 3.5 (LRFD) and Section 3.7 (ASD)
ASTM C90 - Loadbearing concrete masonry units (CMU)	Partially grouted CMU, cracked and uncracked	Table 4.2 Table 4.3	A, B, C*, D, E*, F, G	*ACI 318-11/14* amended by Section 3.5 (LRFD) and Section 3.7 (ASD)
ASTM C55 - Concrete building brick ASTM C129 - Nonloadbearing concrete masonry units (CMU)	Solid concrete masonry unit construction	Table 4.4	A, B, C, D, E, F, G	Section 3.6 (LRFD) Section 3.7 (ASD)
ASTM C62 - Solid building brick ASTM C126 - Solid masonry units ASTM C216 - Solid clay facing brick ASTM C652 - Hollow clay building brick	Clay masonry	Table 4.4	A, B, C, D, E, F, G	Section 3.6 (LRFD) Section 3.7 (ASD)

*Installation in head and T-joints permitted only for solid grouted walls constructed with open-ended units as pictured in Figure 1.1 (b).

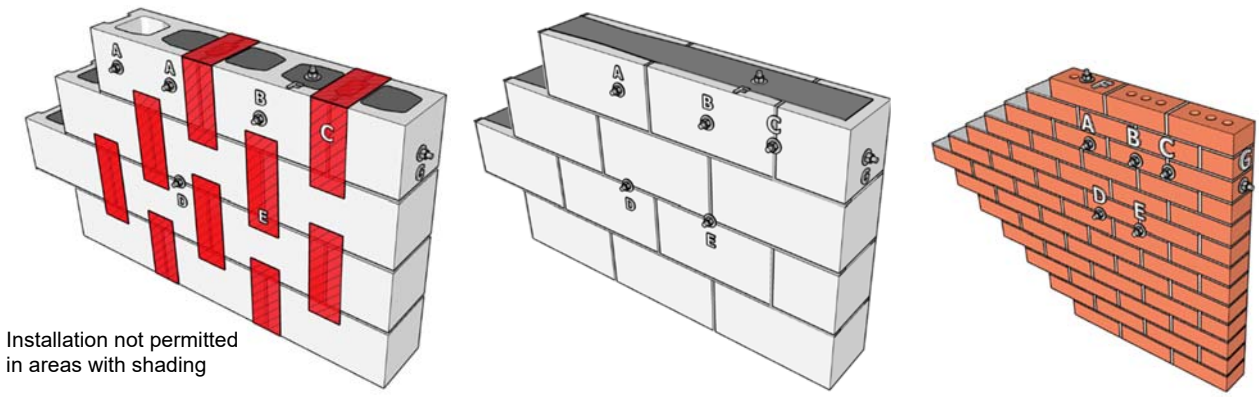

FIGURE 1.1—INSTALLATION LOCATIONS DESCRIBED IN TABLE 1.1: (a) CMU with closed-ended units, (b) CMU with open-ended units, (c) brick masonry

1.3 Codes and Referenced Standards: Where standards are referenced in this criteria, these standards shall be applied consistently with the code upon which compliance is based. Specific standards editions listed in this section apply to all IBC and IRC editions referenced in this document. For standards referenced in these criteria and the applicable code, editions of standards applicable to evaluation referenced by the IBC and IRC are summarized in Table 1.2

1.3.1 2018, 2015, 2012, 2009, and 2006 *International Building Code*® (IBC), International Code Council.

1.3.2 2018, 2015 and 2012, 2009, and 2006 *International Residential Code*® (IRC), International Code Council.

1.3.3 2018, 2015 and 2012 *International Existing Building Code*® (IEBC), International Code Council.

1.3.4 2016 TMS 402, *Building Code Requirements for Masonry Structures*, The Masonry Society.

1.3.5 2013 TMS 402/ACI 530/ASCE 5, *Building Code Requirements for Masonry Structures*, American Concrete Institute/Structural Engineering Institute of the American Society of Civil Engineers/The Masonry Society.

1.3.6 2011 TMS 402/ACI 530/ASCE 5, *Building Code Requirements for Masonry Structures*, American Concrete Institute/Structural Engineering Institute of the American Society of Civil Engineers/The Masonry Society.

1.3.7 ICC-ES AC308 *Acceptance Criteria for Post-Installed Adhesive Anchors in Concrete Elements*.

1.3.8 ACI 318-14, *Building Code Requirements for Structural Concrete*, American Concrete Institute.

1.3.9 ACI 318-11, *Building Code Requirements for Structural Concrete*, American Concrete Institute.

1.3.10 ACI 355.4-11, *Qualification of Post-Installed Adhesive Anchors in Concrete*, American Concrete Institute.

1.3.11 ANSI B 212.15-1994, *American National Standard for Cutting Tools – Carbide Tipped Masonry Drills and Blanks for Carbide-Tipped Masonry Drills*, American National Standards Institute.

1.3.12 ASTM A153, *Standard Specification for Zinc Coating (Hot-Dip) on Iron and Steel Hardware*, ASTM International.

1.3.13 ASTM B695, *Standard Specification for Coatings of Zinc Mechanically Deposited on Iron and Steel*, ASTM International.

1.3.14 ASTM C55, *Standard Specification for Concrete Building Brick*, ASTM International.

1.3.15 ASTM C62, *Standard Specification for Building Brick (Solid Masonry Units Made from Clay or Shale)*, ASTM International.

1.3.16 ASTM C67, *Standard Test Methods for Sampling and Testing Brick and Structural Clay Tile*, ASTM International.

1.3.17 ASTM C90, *Standard Specification for Loadbearing Concrete Masonry Units*, ASTM International.

1.3.18 ASTM C126, *Standard Specification for Ceramic Glazed Structural Clay Facing Tile, Facing Brick, and Solid Masonry Units*, ASTM International.

1.3.19 ASTM C129, *Standard Specification for Nonloadbearing Concrete Masonry Units*, ASTM International.

1.3.20 ASTM C140, Standard Test Methods for Sampling and Testing Concrete Masonry Units and Related Units, ASTM International.

1.3.21 ASTM C216, Standard Specification for Facing Brick (Solid Masonry Units Made from Clay or Shale), ASTM International.

1.3.22 ASTM C270, *Standard Specification for Mortar for Unit Masonry*, ASTM International.

1.3.23 ASTM C476, *Standard Specification for Grout for Masonry*, ASTM International.

1.3.24 ASTM C652, *Standard Specification for Hollow Brick (Hollow Masonry Units Made from Clay or Shale)*, ASTM International.

1.3.25 ASTM C881/C881M, *Standard Specification for Epoxy-Resin-Base Bonding Systems for Concrete*, ASTM International.

1.3.26 ASTM C882, *Standard Test Method for Bond Strength of Epoxy-Resin Systems Used with Concrete by Slant Shear*, ASTM International.

1.3.27 ASTM C1019, *Standard Test Method for Sampling and Testing Grout*, ASTM International.

1.3.28 ASTM C1314, *Standard Test Method for Compressive Strength of Masonry Prisms*, ASTM International.

1.3.29 ASTM D1875, *Standard Test Method for Density of Adhesives in Fluid Form*, ASTM International.

1.3.30 ASTM D2556, *Standard Test Method for Apparent Viscosity of Adhesives Having Shear-Rate-Dependent Flow Properties Using Rotational Viscometry*, ASTM International.

1.3.31 ASTM E488, *Standard Test Method for Strength of Anchors in Concrete and Masonry*, ASTM International.

1.3.32 ASTM E1252, *Standard Practice for General Techniques for Obtaining Infrared Spectra for Qualitative Analysis*, ASTM International.

1.3.33 ASTM E1512, *Standard Test Methods for Testing Bond Performance of Adhesive-Bonded Anchors*, ASTM International.

1.3.34 ASTM E2935, *Standard Practice for Conducting Equivalence Testing in Laboratory Applications*, ASTM International.

1.3.35 ASTM F606, *Standard Test Methods for Determining the Mechanical Properties of Externally and Internally Threaded Fasteners, Washers, Direct Tension Indicators, and Rivets*, ASTM International.

1.3.36 ASTM F1080, *Standard Test Method for Determining the Consistency of Viscous Liquids Using a Consistometer*, ASTM International.

TABLE 1.2—CROSS-REFERENCED CODE AND STANDARD EDITIONS

STANDARD	2006 IBC	2009 IBC	2012 IBC	2015 IBC	2018 IBC	2006 IRC	2009 IRC	2012 IRC	2015 IRC	2018 IRC
ACI 318	2011	2011	2011	2014	2014	2011	2011	2011	2011	2014
ACI 355.4	-	-	2011	2011	2011	-	-	2011	2011	2011
TMS 402/ACI 530/ASCE 5	2005	2008	2011	2013	-	2005	2008	2011	2013	-
TMS 402	-	-	-	-	2016	-	-	-	-	2016
ASTM A153	2003	2005	2005	2009	2009	2003	2005	2005	2009	2009
ASTM B695	2000	2004	2004	2004	2004	2000	2004	2004	2004	2004
ASTM C55	2003	2006	2006e01	2011	2014a	2003	2006	2006e01	2011	2014a
ASTM C62	2004	2005	2008	2013	2013a	2004	2005	2008	2013	2013a
ASTM C67	2003ae01	2007	2008	2013	2014	2003ae01	2007	2008	2013	2014
ASTM C90	2003	2006b	2008	2013	2014	2003	2006b	2008	2013	2014
ASTM C126	1999	1999	2009	2013	2015	1999	1999	2009	2013	2015
ASTM C129	2001	2001	2006	2006	2014a	2003	2006	2006	2011	2014a
ASTM C140	2003	2007	2008a	2013	2015	2003	2007	2008a	2013	2015
ASTM C216	2004a	2007	2007a	2013	2015	2004a	2007	2007a	2013	2015
ASTM C270	2004	2007	2008a	2012a	2014a	2004	2007	2008a	2012a	2014a
ASTM C476	2002	2002	2009	2010	2010	2002	2002	2009	2010	2010

ASTM C652	2004a	2005a	2009	2013	2015	2004a	2005a	2009	2013	2015
ASTM C881	-	-	-	-	-	-	-	-	-	-
ASTM C882	-	-	-	-	-	-	-	-	-	-
ASTM C1019	2003	2007	2009	2010	2016	2003	2007	2010	2010	2016
ASTM C1314	2003b	2007	2007	2007a	2014	2003b	2007	2007	2007a	2014
ASTM D1875	-	-	-	-	-	-	-	-	-	-
ASTM D2556	-	-	-	2010	2010	-	-	-	2010	2010
ASTM E488	1996	1996	1996	1996	2015	1996	1996	1996	1996	2015
ASTM E1252	-	-	-	-	-	-	-	-	-	-
ASTM E1512	1993	1993	1993	1993	1993	1993	1993	1993	1993	1993
ASTM E2935	-	-	-	-	-	-	-	-	-	-
ASTM F606	-	-	-	-	-	-	-	-	-	-
ASTM F1080	-	-	-	-	-	-	-	-	-	-

[1]Blank entries indicate the standard is not applicable or referenced in the specific code.
[2]For standards referenced in the criteria, editions of standards applicable to various codes are summarized in this table.

1.4 Definitions: Definitions included in the IBC, IRC, ACI 318, ACI 355.4 Section 2.1, and AC308 are applicable to this criteria. In addition, the following definitions apply:

1.4.1 Adhesive Anchor: A device for transferring tension and shear loads to masonry, consisting of an anchor element embedded with an adhesive compound in a cylindrical hole drilled in a masonry member.

1.4.2 Adhesive Compound: Any reactive adhesive comprising chemical compounds (components) that react and cure when blended together. The adhesive compound shall be formulated from organic polymer compounds, inorganic cementitious mortars or combination of organic and inorganic compounds. Organic adhesive materials include but are not limited to epoxies, polyurethanes, polyesters, methyl methacrylates and vinyl esters.

1.4.3 Aggressive Exposure Condition: Any anchor environmental exposure that is characterized as equivalent to that produced by exposure of the

adhesive compound to high alkalinity (pH ~ 13) and a high sulfur dioxide concentration (~ 0.7%).

1.4.4 Anchor Diameter: Nominal diameter of the anchor element. For internally threaded sleeves, the anchor diameter shall be taken as the outside diameter of the sleeve.

1.4.5 Anchor Element: The metallic component of the anchor system that is embedded in the masonry with the adhesive compound. Anchor elements include steel bars or rods with deformations or threads, deformed steel reinforcing bars, or internally threaded steel inserts with external deformations.

1.4.6 Anchor Element with Nonuniform Cross-Section: An anchor element having a cross-sectional area less than a threaded section of the same nominal diameter within five diameters of the shear plane.

1.4.7 Anchor Installation: Unless otherwise noted, the process defined by the Manufacturer's Printed Installation Instructions (MPII) for installation of the subject anchor. Anchor installation parameters typically include the following: ambient air and masonry temperature at the time of installation; masonry type; strength and condition of masonry at time of installation; hole drilling method; hole size; hole cleaning and preparation requirements; adhesive material conditioning, mixing and placement; cleanliness of anchor elements; anchor element installation and support in place while curing; gel and cure time restrictions; maximum tightening torque; and installer safety requirements.

1.4.8 Anchor System: An anchor product line for which the component materials, functioning principles and installation parameters are consistent. An anchor system may consist of several anchor diameters, each associated with a specific anchor embedment, or multiple embedments associated with each anchor diameter.

1.4.9 Batch: See Figure 4.1 for illustration of batch concept.

1.4.9.1 Batch, CMU or Brick Unit: Set of units from the same production run comprising constituent materials from the same sources.

1.4.9.2 Batch, Grout: Grout from the same load (i.e., from a single truckload or single mixer load).

1.4.9.3 Batch, Masonry: Assembled masonry test substrate comprising the same combination of CMU/brick unit batch, grout batch, and mortar batch, as applicable.

1.4.9.4 Batch, Mortar: Mortar comprised of specific constituent materials (e.g. cement, lime, sand, water) in a specific ratio (mix design).

1.4.10 Bed Joint: Horizontal mortar joint between two courses of masonry units.

1.4.11 Brick Construction Type: Brick masonry construction combining the following consistent properties: brick unit type (Section 1.4.12), mortar type, number of wythes, presence of grout, and wall thickness. Bricks having cores or cells are assumed to have their voids remain ungrouted in that

no specific effort is used to fill the voids. Grouted brick masonry refers to the presence of a grout layer between wythes.

1.4.12 Brick Unit Type: A unique combination of the following brick unit properties: brick material type and classification as dictated by a recognized standard; specified dimensions; ratio of net to gross cross-sectional area in cored planes; and degree of frogging.

For example, a clay brick unit type could be as follows: Grade MW ASTM C216 brick with 3 5/8 x 2 1/4 x 7 5/8 in. dimensions, an 80% ratio of net to gross cross-sectional area in cored planes, and no frogging.

1.4.13 Bulk Adhesives: Two-component adhesives, with each component supplied separately in industrial quantities in either barrels or 1-to-5-gallon (3.8 to 18.9 liter) cans. They are dispensed with a bulk dispensing machine whereby metering and mixing of the components are to be automatically controlled during dispensing through a metering manifold and disposable mixing nozzle.

1.4.14 Capsule Anchor System: Adhesive compound components for anchor applications packaged in a glass or foil capsule. The capsule diameter corresponds roughly to the nominal anchor diameter. The quantity of resin, hardener and aggregate component in each capsule is suitable for a single anchor application. Mixing of the components is achieved during anchor installation. The capsule is fragmented and becomes part of the hardened resin matrix.

1.4.15 Cartridge System: Adhesive compound components for anchor applications packaged in a dual chamber cartridge for use with either manually or power-driven dispensers. Metering and mixing of the components occurs automatically as the adhesive is dispensed through a manifold and mixing nozzle system.

1.4.16 Cell: Void space in the center of masonry units that extends from the bottom to the top of the masonry unit.

1.4.17 Cell Length: The dimension of an individual cell parallel to the length of the unit.

1.4.18 Cell Thickness: The dimension of an individual cell parallel to the thickness of the masonry unit.

1.4.19 Cracked Masonry:

1.4.19.1 For design purposes, cracked masonry conditions shall be assumed where analysis indicates that cracking could occur ($f_t > f_r$) in the vicinity of the anchor due to service loads or deformations, including wind and seismic loading, over the service life of the anchorage, where f_r is the tensile strength of mortar, masonry units, and grout, as applicable.

1.4.19.2 For testing and assessment purposes, a masonry test member that is cracked at the anchor location prior to anchor installation, and at the beginning of the load test.

1.4.20 Cure Time: The elapsed time after mixing of the adhesive material components to the time the adhesive material has achieved a state of

hardening in the drilled hole corresponding to the mechanical properties and resistances established via the conducting of tests described in this acceptance criteria.

1.4.21 Embedment Depth: The distance from the test member surface to the installed end of the anchor element measured prior to installation.

1.4.22 Gel Time: The elapsed time after mixing of the adhesive material components to the time when there is an onset of a significant chemical reaction as characterized by an increase in viscosity. Mechanical disturbance of the adhesive anchor after the gel time has elapsed and before the cure time is likely to result in impairment of adhesive compound properties.

1.4.23 Head Joint: Vertical mortar joint between two masonry units in the same course and wythe.

1.4.23.1 Head Joint, Hollow: Head joint in CMU construction employing closed-ended units. All head joints in CMU construction with closed-ended units shall be assumed to have mortar only over the depth of each face shell with voids behind the mortar irrespective of degree of mortar/grout application during construction. See Section 3.3.1.2 and Figure 3.2 for design assumptions with hollow head joints.

1.4.23.2 Head Joint, Solid: Head joint in fully grouted CMU employing open-ended units with the mortar applied to the full height of the masonry unit for the full depth of each face shell thickness. See Figure 3.2 for illustration.

1.4.24 Independent Testing and Evaluation Agency (ITEA): A laboratory accredited in conformance with Section 2.2 having responsibility for the testing and assessment of an adhesive anchor in accordance with this acceptance criteria.

1.4.25 Manufacturer's Printed Installation Instructions (MPII): Printed instructions for correct adhesive anchor installation under all covered installation conditions as supplied in product packaging by the manufacturer of the adhesive anchor system. The MPII shall include information on storage conditions, shelf life, and all restrictions on installation conditions.

1.4.26 Maximum Tightening Torque: Maximum torque applied to the anchor that must not be exceeded after the adhesive curing time has elapsed.

1.4.27 Residual Capacity: Ultimate static test load capacity of an anchor (tension or shear) after reliability or service-condition tests have been completed.

1.4.28 Small, Intermediate and Large Diameters: The smallest, largest and intermediate diameters of the anchor system being evaluated. The medium diameter shall be taken as the diameter most closely representing the arithmetic mean of the smallest and largest diameters.

1.4.29 Standard Temperature: 73°F ± 8°F (23 ± 4° C)

1.4.30 Static Load: In testing, load applied quasi-statically to failure consistent the procedure specified in ASTM E488.

1.4.31 Statistically Equivalent: Two groups of test results are statistically equivalent if there are no significant differences between the means of the two groups. Statistical equivalence shall be demonstrated using a two-one-sided t-test (TOST) in accordance with ASTM E2935 at a significance α = 0.10 for an assumed symmetrical equivalence limit E = 15%. For this purpose, the equivalence or nonequivalence of variances shall be established with the F-test or with Levene's test with α = 0.10.

1.4.32 Steel Failure: Failure of the tested adhesive anchor characterized by fracture of the anchor element.

1.4.33 Test Member: The masonry member receiving anchors to be tested.

1.4.34 Test Series: A group of identical anchors tested under identical conditions. Identical anchors originate from the same adhesive batch, use identical anchor elements, and are installed with identical equipment. Identical conditions are diameter, length, embedment, spacing, edge distance, masonry type, test member thickness, and masonry strength.

1.4.35 Ultimate Load: The maximum load recorded in a load test.

1.4.36 Uncracked Masonry:

1.4.36.1 For design purposes, uncracked masonry conditions may be assumed where analysis indicates no cracking ($f_t < f_r$) due to service loads or deformations, including wind and seismic loading, over the

service life of the anchorage, where f_r is the tensile strength of mortar, masonry units, and grout, as applicable.

1.4.36.2 For testing and assessment purposes, a masonry test member that is uncracked at the anchor location at the beginning of the load test.

1.5 Notations: Notations included in the IBC, IRC, ACI 318, ACI 355.4 Section 2.1, and AC308 are applicable to this criteria. In addition, the following notations also apply:

A_b = effective cross-sectional area of reinforcing steel, in.^{2} (mm^2)
$A_{se,N}$ = effective cross-sectional area of anchor in tension, in.^{2} (mm^2)
$A_{se,V}$ = effective cross-sectional area of anchor in shear in.^{2} (mm^2)
$c_{a,\min}$ = minimum edge distance permitted for ungrouted CMU construction ($c_{a,\min,ug}$) and brick masonry construction ($c_{a,\min,br}$), inches (mm)
c_{cr} = least edge distance permitted to consider full capacity of an individual anchor for ungrouted CMU construction ($c_{cr,ug}$) and brick masonry construction ($c_{cr,br}$), inches (mm)
d_a = nominal outside diameter of post-installed anchor, inches (mm)
d_o = nominal diameter of drilled hole in the masonry, inches (mm)
E = Effect of horizontal (E_h) and vertical (E_v) earthquake-induced forces
F_k = characteristic capacity for a test series, calculated in accordance with Eq. (9-10), lb. (N)
$\bar{F}_x$ = mean capacity of test series x, lb. (N)
f'_m = specified 28-day compressive strength of masonry, psi (MPa)
f'_g = specified 28-day compressive strength of grout, psi (MPa)
$f_{b,i}$ = unit compressive strength corresponding to reported masonry strength i, psi (MPa)
$f_{b,i(28+)}$ = ASTM C140 unit compressive strength tested at or beyond 28 days from manufacture, psi (MPa)
$f_{b,i(t)}$ = unit compressive strength at age *t,* in days, of grout during testing, psi (MPa)

$f_{b,test,x}$ = unit compressive strength tested in accordance with ASTM C140 for series x, psi (MPa)

$f_{g,i}$ = grout compressive strength corresponding to reported masonry strength i, psi (MPa)

$f_{g,i(28)}$ = best-fit (i.e., calculated, not tested) 28-day grout compressive strength using least-square regression of ASTM C1019 test data for use in Eq. (8-1), psi (MPa)

$f_{g,i(t)}$ = grout compressive strength at age *t*, in days, of grout during testing, psi (MPa)

$f_{g,test,x}$ = grout compressive strength tested in accordance with ASTM C1019 for series x, psi (MPa)

f_m = masonry compressive strength, psi (MPa)

f_r = tensile strength of mortar, masonry, and grout, as applicable, psi (MPa)

f_t = masonry tensile strength, psi (MPa)

f_{uta} = minimum specified tensile strength of threaded rod, psi (MPa)

h_b = effective embedment depth of the anchor element installed in the face shell of the unit, measured from the masonry surface to the face-shell-to-grout interface, inches (mm)

h_{ef} = for grouted CMU construction, the effective embedment depth of the anchor element, measured from the masonry surface to the deepest point at which bond to the adhesive material is established, inches (mm)

= for ungrouted CMU and brick masonry construction, the effective embedment of the anchor element, measured from the masonry surface to the deepest point at which the anchor element, inches (mm)

h_g = effective embedment depth of the anchor element installed in grout, measured from the face-shell-to-grout interface to the deepest point at which bond to the adhesive material is established, inches (mm)

h_{rod} = (*for ungrouted CMU and brick masonry construction only*) the embedment depth of the anchor element, measured from the masonry surface to the end of the anchor element, inches (mm)

h_{screen} = for ungrouted CMU and brick masonry construction, nominal embedment depth of the adhesive anchor system, excluding the anchor element, measured from the masonry surface to the deepest point at which all non-adhesive components of the anchorage (e.g., screen tubes) are installed, inches (mm)

h_{sl} = slice thickness as measured immediately prior to punch testing, inches (mm)

h_o = depth of drilled hole, inches (mm)

K = tolerance factor corresponding to a 5 percent probability of non-exceedance with a confidence of 90 percent derived from a noncentral t-distribution for

which the population standard deviation is unknown (values for specific samples sizes n are provided in Table 8.1)

k = effectiveness factor

l_{brick} = greatest length of brick in installed condition; orthogonal to axis of anchor installation in the face of the masonry wall, inches (mm)

$\min N_{adh,x}$ = minimum value of adhesion force determined for Test series x, lb. (N)

N_{adh} = tensile load corresponding to loss of adhesion between adhesive and masonry, lb. (N)

N_{cure} = tensile capacity corresponding to the manufacturer's specified minimum cure time, lb. (N)

N_{eq} = maximum tensile load to be applied in the simulated seismic tension test, lb. (N)

N_{int} = intermediate tensile load to be applied to in the simulated seismic tension test, lb. (N)

N_k = characteristic tensile capacity of an anchor, i.e., the 5-percent fractile of test results, lb. (N)

$N_{k,i}$ = characteristic tensile capacity from reliability test series in masonry batch or test member i calculated in accordance with Eq. (8-10), lb. [N]

$N_{k,lt}$ = characteristic tensile capacity at long-term elevated temperature, lb. (N)

$N_{k,st}$ = characteristic tensile capacity at short-term elevated temperature, lb. (N)

$N_{k,o}$ = characteristic tensile capacity of an anchor in reference test series, lb. (N)

$N_{k,o,i}$ = characteristic tensile capacity from reference test series in masonry batch or test member i calculated in accordance with Eq. (8-10), lb. [N]

$\overline{N}_{lt}$ = mean tensile capacity of an anchor at long-term elevated temperature, lb. (N)

N_m = minimum tensile load to be applied to an anchor in the simulated seismic tension test, lb. (N)

$\overline{N}_{o,i}$ = mean tensile capacity as determined from reference test series in masonry batch i, lb. (N)

N_p = characteristic tensile pullout capacity of an anchor, lb. (N)

N_{red} = reduced sustained load in a reliability test series as required to satisfy displacement criteria, lb. (N)

N_{req} = required sustained load associated with $N_{sust,lt}$, lb. (N)

N_s = characteristic steel tensile capacity of an anchor, lb. (N)

$\overline{N}_{st}$ = mean tensile capacity of an anchor at short-term elevated temperature, lb. (N)

$N_{sust,ft}$ = sustained tensile load applied during freezing and thawing cycles, lb. (N)

$N_{sust,lt}$ = sustained tensile load applied at long-term temperature, lb. (N)

N_{u,f_m} = peak load measured in a tension test normalized by relevant material properties, lb. (N)

$N_{u,test}$ = peak load measured in a tension test, lb. (N)

$\overline{N}_{u,i}$ = mean tensile capacity for reliability test series conducted in masonry batch i, lb. (N)

$N_{u,alk/sulf,j}$ = measured axial load corresponding to failure of slice j, lb. (N)

N_w = tensile load applied to anchor during crack width cycling, lb. (N)

n = number of replicates in a test series, number of anchors in an anchor group, and exponent for determining relationship of bond stress as a function of grout and unit compressive strength

$s_{\min}$ = minimum spacing permitted for consideration of multiple anchor capacities in ungrouted CMU construction ($s_{\min,ug}$) and brick masonry construction ($s_{\min,br}$), in. (mm). Refer to Section 3.4.2.3.2 and Section 3.6.2.3.2 for ungrouted CMU and brick construction, respectively.

T_{inst} = specified tightening torque for setting or prestressing of an anchor in accordance with the MPII, ft-lb (kN-m)

t_{brick} = thickness of brick unit in installed condition; parallel to axis of anchor installation, inches (mm)

t_f = thickness of face shell, inches (mm)

$t_{service}$ = intended anchor service life, in hours

t_{wall} = thickness of wall in installed condition; parallel to axis of anchor installation, inches (mm)

V_{eq} = maximum shear load to be applied in the simulated seismic shear tests, lb. (N)

V_{int} = intermediate shear load to be applied in the simulated seismic shear tests, lb. (N)

V_m = minimum shear load to be applied in the simulated seismic shear tests, lb. (N)

V_s = characteristic shear capacity corresponding to shear failure, lb. (N)

$V_{s,seis}$ = seismic shear capacity as governed by steel failure, lb. (N)

v_x = sample coefficient of variation for test series x equal to the sample standard deviation divided by the mean, percent

α = ratio of reliability tensile test results to reference tensile test results

α_{adh} = ratio of the load at loss of adhesion to the peak load

α_{cat2} = additional reduction factor for Anchor Category 2.

α_{COV} = reduction factor associated with the coefficient of variation of peak loads

α_{cr} = ratio of cracked to uncracked anchor tensile capacity in the bed joint (i.e., $\tau_{k,1e} / \tau_{k,1b}$)

α_{dur} = reduction factor for durability tests

α_{fm} = normalization factor accounting for masonry composite strength

α_{fut} = normalization factor accounting for steel strength

α_{lt} = reduction factor for maximum long-term temperature

α_{req} = threshold value of α given in Table 6.1

$\alpha_{req,cat2}$ = α_{req} corresponding to Anchor Category 2 for corresponding reliability test

α_{setup} = 0.75 for confined tension tests in uncracked masonry

= 0.70 for confined tension tests in cracked masonry

α_{st} = reduction factor for maximum short-term temperature

α_{dur} = reduction factor for durability

$\alpha_{masonry}$ = reduction factor for the non-homogeneity of masonry materials in anchor breakout and bond strength determination

= 0.7

α_{top} = ratio of cracked to uncracked tensile capacity in top-of-wall tests (i.e., $\tau_{k,1e} / \tau_{k,1b}$)

α_{ρ} = reduction factor for reduced load in freezing-and-thawing tests;

$\alpha_{\rho,sust}$ = reduction factor for sustained load reliability tests

β = $\min\left[\min\left(\alpha/\alpha_{req}\right);\min\alpha_{adh}\right]$ for the reliability and service-condition tests listed in Table 8.2 and Table 8.3, where α is the ratio of reliability test result to reference test result evaluated for all reliability tests listed in Table 8.2; α_{adh} is the reduction factor for loss of adhesion as evaluated for all reliability tests listed in Table 8.2 and for all service-condition tests listed in Table 8.3;

Δ = anchor displacement within a test, inches (mm)

Δ_h = minimum of 1.5 in. (38.1 mm) for grouted CMU construction; minimum of 1 in. (25.4 mm) for solid CMU and solid brick units where no screen tube is employed

$\Delta_{0.3}$ = displacement at $N = 0.3N_u$, inches (mm)

$\overline{\Delta}_{\lim}$ = mean displacement corresponding to loss of adhesion load N_{adh}, inches (mm)

$\Delta_{service}$ = extrapolated estimate of the total displacement over the intended service life, inches (mm)

$\Delta_{t=0}$ = initial displacement under sustained load, inches (mm)

$\Delta(t)$ = displacement at time t under sustained load, inches (mm)

ϕ = strength reduction factor for masonry failure and steel failure modes corresponding with the Anchor Category

$\bar{\tau}_{dur,i}$ = mean bond stress corresponding to durability tests with test member or masonry batch i stored in different media, psi (MPa)

τ_u = calculated bond stress corresponding to peak load in a tension test, psi (MPa)

$\tau_{k(cr,uncr)}$ = characteristic bond stress capacity in cracked or uncracked masonry, respectively, psi (MPa)

$\tau_{k,i}$ = characteristic bond stress corresponding to tension tests in test member i or masonry batch i, psi (MPa)

$\tau_{k,\min}$ = minimum permissible bond stress, psi (MPa)

$\tau_{k,seis(cr,uncr)}$ = seismic tensile bond stress capacity, psi (MPa)

$\bar{\tau}_{o,i}$ = mean reference bond stress corresponding to durability tests with test member i or masonry batch i, psi (MPa)

Ω_o = amplification factor to account for overstrength of the seismic-force-resisting system determined in accordance with ACSE 7, the IBC, and IRC, as applicable.

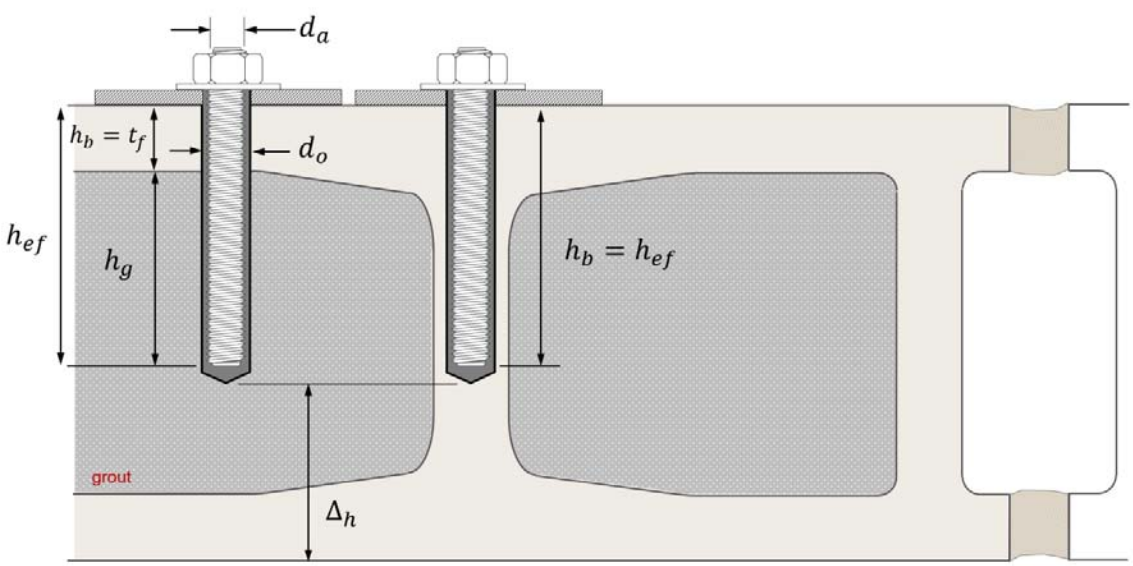

FIGURE 1.2—DIMENSIONAL PARAMETERS FOR ANCHORS IN GROUTED CMU

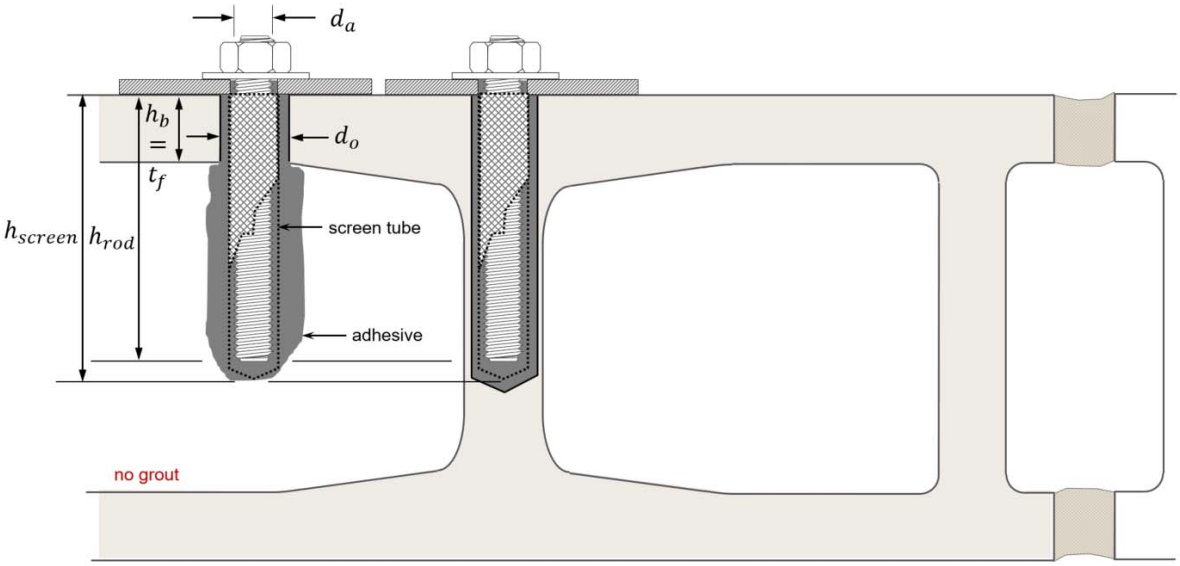

FIGURE 1.3—DIMENSIONAL PARAMETERS FOR ANCHORS IN UNGROUTED CMU WITH SCREEN TUBES

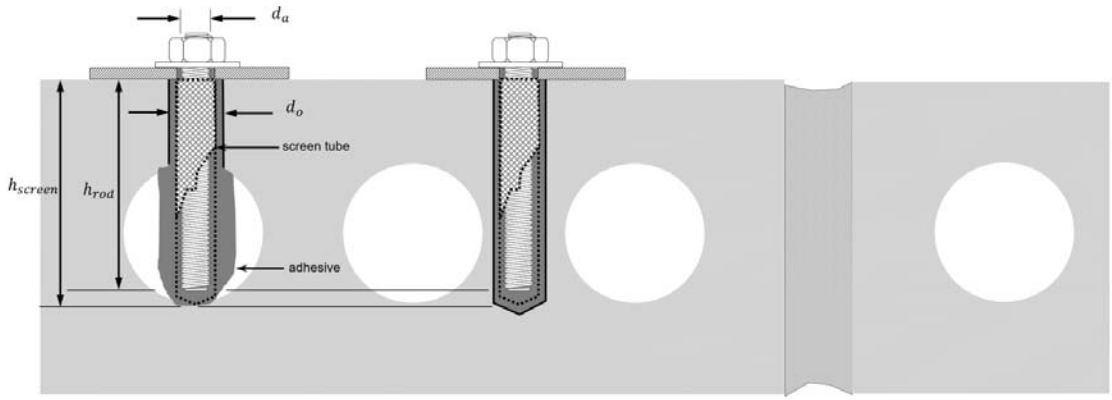

FIGURE 1.4—DIMENSIONAL PARAMETERS FOR ANCHORS IN BRICK UNIT MASONRY WITH SCREEN TUBES

2.0 BASIC INFORMATION

2.1 General: The following information shall be submitted:

2.1.1 Product Description: Anchors shall be described as to:

2.1.1.1 Generic or trade name.

2.1.1.2 Manufacturer's catalog number.

2.1.1.3 Adhesive name.

2.1.1.4 Adhesive packaging.

2.1.1.5 Basic Materials:

2.1.1.5.1 Steel Anchoring Materials: The reinforcing bar, bolt, threaded rod, internally threaded sleeve, or mesh screen/sleeve shall be described, including the presence of protective coatings and compliance with an appropriate national standard, e.g., for tensile strength and hardness. Reports shall be generated by a mill or accredited testing laboratory. Where actual material strength exceeds the specified minimum strength, adhesive anchor load test results shall be normalized to the specified minimum strength as described in Section 8.3.4.1. Where no relevant physical property specification exists, acceptable properties for quality control purposes shall be established through testing.

2.1.1.5.2 Adhesive Components: The components shall be described, including the adhesive chemistry type, packaging system, mixing system, mixing ratios, gel time, setting time, storage information, and shelf life.

2.1.1.5.3 Non-steel Anchoring Materials: The screen tubes, mesh sleeves or similar non-steel components shall be described. Description shall include the material used in these components, the function of these components with the adhesive and anchoring materials, and dimensions.

2.1.1.6 Material Properties:

2.1.1.6.1 Steel: For both standard-specification and proprietary steel anchor elements, tensile elongation and reduction of area

shall be determined in accordance with a recognized standard and reported on the data sheet. If the elongation is at least 14 percent and the reduction of area is at least 30 percent, the anchor shall be considered to meet the ductile steel requirements of ACI 318. If the ductility or reduction of area cannot be determined, the anchor shall be described as brittle in the evaluation report. Proprietary steel anchor elements for which recognition is sought shall be tested in compliance with an appropriate national standard for verification of physical properties.

2.1.1.6.2 Adhesive: For the adhesive used in the anchor qualification tests, the components shall be tested in accordance with this section to establish a standard fingerprint for comparison with future production during required quality control inspections. For quality control procedures, refer to Section 9.0 of this criteria. The specimens tested shall be sampled by the ITEA in accordance with Section 2.4. It shall be permitted to test the components separately or their mixture, as appropriate. The manufacturer shall select from the following list a minimum of three (3) fingerprint tests for this purpose:

a. infrared absorption spectroscopy in accordance with ASTM E1252;

b. bond strength in accordance with ASTM C882 or equivalent method;

c. specific gravity in accordance with ASTM D1875;

d. gel time in accordance with ASTM C881/C881M;

e. viscosity in accordance with ASTM D2556, F1080 or equivalent method;

f. other tests appropriate for the specific product and that can be shown to provide positive identification.

Test methods not described herein shall be proposed to and accepted by the ITEA and ICC-ES prior to commencing tests. All fingerprinting tests shall be conducted by the ITEA and checked against the manufacturer's product specifications.

2.1.2 Manufacturer's Printed Installation Instructions (MPII): Manufacturer's printed installation instructions for installation and application for all covered installation conditions, as supplied with product packaging shall be submitted.

2.1.3 Packaging and Identification: A description of the method of packaging and field identification of all components of the adhesive anchors shall be provided. The manufacturer's name, logo or insignia, manufacturer's contact information, product name and size, lot number, packing date and shelf life or adhesive expiration date, and evaluation report number (ESR-XXXX) shall be marked on the adhesive packaging (e.g. cartridge or foil pack), and on the adhesive anchor components or their packaging units.

2.1.4 Qualification Test Plan: A qualification test plan shall be submitted to and approved by ICC-ES staff prior to any testing being conducted.

583 **2.2 Conduct of Testing and Assessment:**

584 **2.2.1 Requirements for the Independent Testing and**
585 **Evaluation Agency:** The testing and assessment of anchors under these
586 criteria shall be performed by an Independent Testing and Evaluation Agency
587 (ITEA) that is accredited as a testing laboratory conforming to ISO/IEC 17025 by
588 an accreditation body that is a signatory to the International Laboratory
589 Accreditation Cooperation Mutual Recognition Arrangement. The ITEA's
590 accreditation shall include testing of anchors in accordance with ASTM E488,
591 ASTM E1512, ICC-ES AC308, ACI 355.4, and this acceptance criteria, and the
592 ITEA shall have experience in the assessment of anchor test data.

593 Subject to prior approval by ICC-ES, the assessment may also be
594 performed by a separate agency, not engaged in the production or distribution of
595 anchors, having several years of documented experience in the assessment and
596 conduct of testing of anchors. If the testing is performed by one or more ISO/IEC
597 17025 accredited laboratories, the ITEA or the separate evaluation agency shall
598 be responsible for overseeing the development of the test program, the conduct
599 of the tests, and shall also be responsible for ensuring that all test results are
600 preserved and included in the assessment.

601 **2.2.2 Testing Laboratories:** As a source of test reports, testing
602 laboratories shall comply with Section 2.0 of the ICC-ES Acceptance Criteria for
603 Test Reports (AC85) and Section 4.2 of the ICC-ES Rules of Procedure for
604 Evaluation Reports.

605 **2.2.3 Testing by the ITEA and Manufacturer:**

2.2.3.1 The required minimum sample size of reference, reliability, and service-condition test numbers given in Table 4.1 through Table 4.4 of this acceptance criteria shall be performed by the ITEA (Section 2.2.1). The testing laboratory shall verify that all elements of the test program and analysis are in compliance with this criteria. The testing laboratory shall conduct or directly verify all testing procedures. Test reports and assessment reports shall be signed by a registered design professional employed or retained by the ITEA,

2.2.3.2 Results of additional tests performed by the manufacturer may be considered in the evaluation if the results are statistically equivalent (see Section 1.4.31) to those of the ITEA. All tests conducted by the manufacturer shall be witnessed by the ITEA for conformance with the requirements of these criteria in accordance with Section 2.2.1.

2.3 Test Reports: Test reports shall comply with AC85, as well as the following, as applicable:

2.3.1 Test reports shall be signed by a registered design professional.

2.3.2 All reporting requirements described in ASTM E488 (e.g., ASTM E488-15 Section 15) or ASTM E1512, as applicable.

2.3.3 Reporting requirements prescribed within this acceptance criteria, including:

a. Verification of compliance/non-compliance with the “Assessment of results” sections for individual tests.

b. Verification that test specimen sampling complies with Section 4.8.1.

c. Verification of anchor installation being in compliance with the MPII, including minimum hole cleaning procedures and equipment.

d. Section 4.8.1 and 4.8.2 for details about masonry for test members.

e. Section 4.8.3 for details about anchor installation.

f. Section 4.8.4 for details about drill bits used.

g. Identification of the test standard used and the date of issue of the standard, and other relevant information concerning the test procedure, justification for any deviations from the referenced test standard, and any critical information relevant to the specific test.

h. Mode of failure for each test specimen, e.g. steel rupture, masonry cracking, masonry splitting, masonry breakout, anchor pullout, etc.

i. Lot numbers or batch numbers for adhesive.

j. Photographs of the test setup and typical failure modes shall be included in the test report.

2.3.4 Verification that the test specimen sampling complies with Section 2.4.

2.3.5 Strength of Anchoring Materials: The test report shall note the strength of threaded rods, reinforcing bars or internally threaded inserts that are used in the test program as set forth in Sections 2.1.1.5.1 and 2.1.1.6.1 of this criteria.

2.3.6 Masonry Properties: The test report shall describe the masonry properties as set forth in Sections 4.8.1 and 4.8.2 of this acceptance criteria.

2.4 Product Sampling: Sampling of the adhesive anchors for tests under this acceptance criteria shall comply with Section 3.1, 3.3, and 3.4 of AC85. The ITEA shall visit the adhesive anchor manufacturing or distribution facility, shall randomly select all components of the adhesive anchors for testing, and shall verify that the samples are representative of the production of the manufacturer as supplied to the marketplace. The product characteristics shall be within the tolerance limits reported in the quality documentation and the relevant standards.

2.4.1 To test newly developed anchors that are not in production (e.g. prototypes), use samples produced by the expected methods. After production has begun, identification and reference tests shall be performed to verify that the anchor materials have not changed and that the performance of the production anchors is statistically equivalent to that of the anchors originally tested.

2.4.2 When internally threaded anchors are supplied without fastening items such as bolts, the manufacturer shall specify the bolts to be used.

2.4.3 The sample sizes given in Table 4.1, Table 4.2, Table 4.3, and Table 4.4 are the minimum required to satisfy these criteria. At the

discretion of the ITEA or manufacturer, the sample size shall be permitted to be increased.

2.4.4 Where tensile tests on anchor elements are required to establish material properties, a minimum of three replicates shall be performed.

2.5 Data Analysis: Perform analysis in accordance with prescribed procedures for individual tests within this acceptance criteria. Documents containing analysis of data shall be signed and sealed by a registered design professional.

3.0 ANCHOR STRENGTH DESIGN

3.1 Design basis: Anchors shall be designed in accordance with the strength design provisions provided in this section. The strength design of adhesive anchors in fully grouted masonry is derived substantially from the provisions for adhesive anchors in concrete as described in ACI 318, where the uniform bond model contained in that document has been shown to represent the behavior of adhesive anchors in grouted masonry with sufficient accuracy.

3.2 General Notes and Modifications:

3.2.1 This acceptance criteria references sections, tables, and figures in both this acceptance criteria and ACI 318. Refer to Section 1.2.1 for the methodology on how to differentiate between the two referenced documents.

3.2.2 Where language from ACI 318 is directly referenced, the following modifications generally apply:

- The term “masonry” shall be substituted for the term “concrete” wherever it occurs.

- The modification factor to reflect the reduced mechanical properties for mixtures with lightweight aggregate and lightweight units, λ_a, shall be taken as 1.0.
- In addition to *ACI 318 Section 2.2 (Section D.1)*, the following definitions shall be used:

masonry, fully grouted*—Concrete masonry unit (CMU) construction in which all cells or spaces are filled with grout.*

masonry, partially grouted*— Concrete masonry unit (CMU) construction in which designated cells or spaces are filled with grout, while other cells or spaces remain ungrouted.*

masonry, ungrouted*—Concrete masonry unit (CMU) construction in which none of the cells or spaces are filled with grout.*

masonry, brick*—Clay brick masonry construction.*

3.2.3 Subsequent sections within this section address the design of adhesive anchors in masonry:

- Section 3.3: Strength design in fully grouted concrete masonry unit construction (covering both closed- and open-ended units).
- Section 3.4: Strength design in ungrouted concrete masonry unit construction.
- Section 3.5: Strength design in partially grouted concrete masonry unit construction.
- Section 3.6: Strength design in brick masonry construction.

- Section 3.7: Conversion of strength design capacities to allowable stress design capacities.

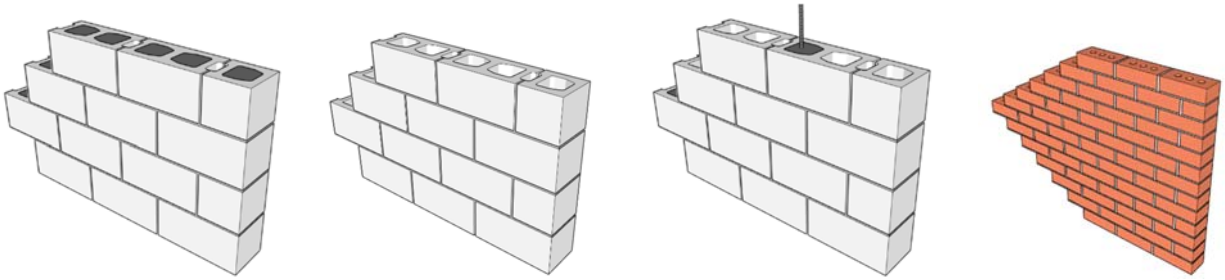

Section 3.3 **Section 3.4** **Section 3.5** **Section 3.6**

FIGURE 3.1— CONSTRUCTION TYPES COVERED FOR DESIGN OF ANCHORAGES IN MASONRY

3.3 Strength Design of Adhesive anchors in fully grouted concrete masonry unit construction: Strength design of adhesive anchors in fully grouted concrete masonry unit construction shall be conducted in accordance with the provisions for the design of adhesive anchors in concrete in *ACI 318-11 Appendix D* or *ACI 318-14 Chapter 17* as modified by this section. Design in accordance with this document cannot be conducted without reference to *ACI 318 (-14 or -11)* with the deletions and modifications summarized in Table 3.1.

3.3.1 General Notes and Modifications: The notes and modifications within this subsection shall apply throughout the design provisions.

3.3.1.1 The following terms shall be replaced wherever they occur:

***ACI 318-11/14* term**	**Replacement term**
f'_c	f'_m
N_{cb} , N_{cbg}	N_{mb} , N_{mbg}
N_a , N_{ag}	N_{ma} , N_{mag}

V_{cb} , V_{cbg}	V_{mb} , V_{mbg}
V_{cp} , V_{cpg}	V_{mp} , V_{mpg}

3.3.1.2 Edge assumptions for design purposes and restrictions for anchor placement are illustrated in Figure 3.2. For CMU construction with hollow head joints (Section 1.4.23.1), in addition to the ends and edges of walls, the nearest head joint on a horizontal projection from the anchor shall be treated as an edge for design purposes. The minimum distance from the nearest adjacent head joint shall be 2 inches (50.8 mm) in CMU construction with hollow head joints. For anchor groups installed in CMU construction with solid head joints (Section 1.4.23.2), the nearest head joint outside of the group on a horizontal projection to the group shall be treated as an edge. If open-ended units are employed, only the ends and edges of walls shall be considered for edge distance determination.

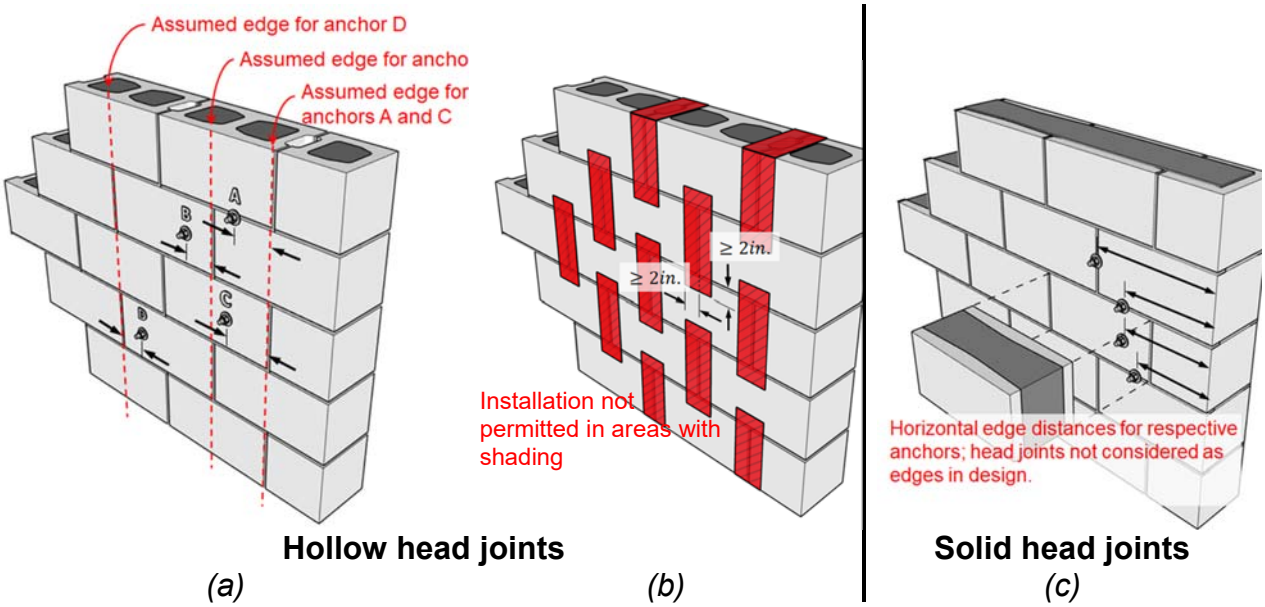

FIGURE 3.2—(a) Edge distance considerations in fully grouted CMU construction with hollow head joints (see Section 1.4.23.1), (b) exclusion zones in fully grouted construction with hollow head joints, and (c) edge distance considerations in fully grouted CMU construction with solid head joints (see Section 1.4.23.2). (Note: dimensions to upper and lower edges omitted for clarity)

3.3.2 Specific modifications: Table 3.1 provides a summary of all applicable *ACI 318-11 Appendix D* and *ACI 318-14* sections for the design of adhesive anchors in fully grouted masonry. Where applicable, modifying sections contained within this document are also provided.

TABLE 3.1—ACI 318-14 and -11 SECTIONS APPLICABLE OR MODIFIED BY THIS CRITERIA

ACI 318-14 Section	*(ACI 318-11 Section)*	**Modified by**
2.2	*(2.1)*	unchanged*
2.3	*(D.1)*	Section 3.2.2
17.1.1 – 17.1.2	*(D.2.1 – D.2.2)*	unchanged*
17.1.3	*(D.2.3)*	Section 3.3.2.2
17.1.4 – 17.2.2	*(D.2.4 – D.3.2)*	unchanged*
17.2.3	*(D.3.3)*	Section 3.3.2.4
17.2.5	*(D.3.5)*	Section 3.3.2.5
17.3.1.1	*(D.4.1.1)*	Section 3.3.2.6
17.3.1.2 – 17.3.1.3	*(D.4.1.2 – D.4.1.3)*	unchanged*
17.3.2 excluding 17.3.2.1	*(D.4.2 excluding D.4.2.1)*	
17.3.3	*(D.4.3)*	Section 3.3.2.9
17.4.1	*(D.5.1)*	unchanged*
17.4.2.1	*(D.5.2.1)*	Section 3.3.2.11
17.4.2.2	*(D.5.2.2)*	Section 3.3.2.12
17.4.2.3 – 17.4.2.5	*(D.5.2.3 – D.5.2.5)*	unchanged*
17.4.2.6	*(D.5.2.6)*	Section 3.3.2.14
17.4.2.7 – 17.4.2.9	*(D.5.2.7 – D.5.2.9)*	unchanged*
17.4.5.1	*(D.5.5.1)*	Section 3.3.2.16
17.4.5.2	*(D.5.5.2)*	Section 3.3.2.17
17.4.5.3 – 17.4.5.4	*(D.5.5.3 – D.5.5.4)*	unchanged*
17.5.1.1 – 17.5.2.2	*(D.6.1.1 – D.6.2.2)*	
17.5.2.4 – 17.5.2.6	*(D.6.2.4 – D.6.2.6)*	
17.5.2.8	*(D.6.2.8)*	
17.5.3	*(D.6.3)*	
17.6	*(D.7)*	
17.8.1	*(D.9.1)*	
17.8.2.1	*(D.9.2.1)*	Section 3.3.2.20
17.8.2.4	*(D.9.2.4)*	unchanged*

*Sections marked as unchanged adopt the general changes prescribed in Section 3.2.2.

3.3.2.1 *ACI 318 Section 17.1.1-17.1.2 (Section D.2.3-D.2.4) apply with the general changes prescribed in Section 3.2.2*.

3.3.2.2 *In lieu of ACI 318 Section 17.1.3 (Section D.2.3):*

Design provisions are included for adhesive anchors that meet ICC-ES AC58.

3.3.2.3 *ACI 318 Section 17.1.4-17.2.2 (Section D.2.4-D.3.2) apply with the general changes prescribed in* Section 3.2.2.

3.3.2.4 *In lieu of ACI 318 Section 17.2.3 (Section D.3.3)*: The design of anchors in structures assigned to Seismic Design Category (SDC) C, D, E, or F shall satisfy the requirements of this section.

3.3.2.4.1 The design of anchors in the plastic hinge zones of masonry structures under earthquake forces is beyond the scope of these acceptance criteria.

3.3.2.4.2 The anchor or group of anchors shall be designed for the maximum tension and shear obtained from the design load combinations that include E, with E_h increased by Ω_o. The anchor design tensile strength shall satisfy the tensile strength requirements of Section 3.3.2.4.3.

3.3.2.4.3 The anchor design tensile force for resisting earthquake forces shall be determined from consideration of (a) through (c) for the failure modes given in Table 3.2 assuming the masonry is cracked unless it can be demonstrated that the masonry remains uncracked.

(a) ϕN_{sa} for a single anchor, or for the most highly stressed individual anchor in a group of anchors.

(b) 0. 75 ϕN_{mb} or 0.75 $\phi N_{mbg.}$

(c) 0.75 ϕN_{ma} or 0.75 $\phi N_{mag.}$

(d) where ϕ is in accordance with Section 3.3.2.3.

3.3.2.5 In lieu of *ACI 318 Section 17.2.5 (Section D.3.5)*: For anchors designed for sustained tension loading, *ACI 318 Section 17.3.1.2*

(Section D.4.1.2) shall be satisfied. For groups of anchors, *ACI 318 Eq. 17.3.1.2 (Eq. D-1)* shall be satisfied for the anchor that resists the highest sustained tension load. Inspection requirements for horizontal anchors designed for sustained tension loading shall be in accordance with *ACI 318 Section 17.8.2.4 (Section D.9.2.4).* Installers of such anchors shall be qualified for the installation of the anchor type used.

3.3.2.6 *In lieu of ACI 318 Section 17.3.1.1 (Section D.4.1.1)*: The design of anchors shall be in accordance with Table 3.2. In addition, the design of anchors shall satisfy Section 3.3.2.4 for earthquake loading and *ACI 318 Section 17.3.1.2 (Section D.4.1.2)* for anchors designed for sustained tensile loading.

TABLE 3.2—REQUIRED STRENGTH OF ANCHORS

Failure mode	Single anchor	Anchor group[1]	
		Individual anchor in a group	Anchors as a group
Steel strength in tension	$\phi N_{sa} \geq N_{ua}$	$\phi N_{sa} \geq N_{ua,i}$	
Masonry breakout strength in tension	$\phi N_{mb} \geq N_{ua}$		$\phi N_{mbg} \geq N_{ua,g}$
Bond strength in tension	$\phi N_{ma} \geq N_{ua}$		$\phi N_{mag} \geq N_{ua,g}$
Steel strength in shear	$\phi V_{sa} \geq V_{ua}$	$\phi V_{sa} \geq V_{ua,i}$	
Masonry breakout strength in shear	$\phi V_{mb} \geq V_{ua}$		$\phi V_{mbg} \geq V_{ua,g}$
Masonry crushing strength in shear	$\phi V_{mc} \geq V_{ua}$	$\phi V_{mc} \geq V_{ua,i}$	
Masonry pryout strength in shear	$\phi V_{mp} \geq V_{ua}$		$\phi V_{mpg} \geq V_{ua,g}$

[1]Required strengths for steel and pullout failure modes shall be calculated for the most highly stressed anchor in the group.

3.3.2.7 *ACI 318 Section 17.3.1.2-17.3.1.3 (Section D.4.1.2-D.4.1.3)* applies with the general changes prescribed in Section 3.2.2.

3.3.2.8 *ACI 318 Section 17.3.2* excluding *Section 17.3.2.1* (*Section D.4.2* excluding *Section D.4.2.1*) applies with the general changes prescribed in Section 3.2.2.

3.3.2.9 In lieu of *ACI 318 Section 17.3.3 (Section D.4.3)*: Strength reduction factor ϕ for anchors in masonry shall be as follows when the LRFD load combinations of ASCE 7 are used:

a. For steel capacity of ductile steel elements as defined in Section 2.1.1.6.1**,** ϕ shall be taken as 0.90. Where the ductility requirements of Section 2.1.1.6.1 are not met, ϕ shall be taken as 0.65 in tension and 0.60 in shear.

b. For shear crushing capacity**,** ϕ shall be taken as 0.50.

c. For cases where the nominal strength of anchors in masonry is controlled by masonry breakout in tension, ϕ shall be taken as 0.65.

d. For cases where the nominal strength of anchors in masonry is controlled by masonry breakout or pryout in shear, ϕ shall be taken as 0.70.

e. For cases where the nominal strength of anchors in masonry is controlled by bond failure, ϕ shall be taken as 0.65 for anchors qualifying for Category 1 and 0.55 for anchors qualifying for Category 2 in Section 7.5.3.

3.3.2.10 *ACI 318 Section 17.4.1 (Section D.5.1)* applies with the general changes prescribed in Section 3.2.2.

3.3.2.11 In lieu of *ACI 318 Section 17.4.2.1 (Section D.5.2.1)*: The nominal breakout strength in tension, N_{mb} of a single anchor or N_{mbg} of a group of anchors, shall not exceed:

a. For a single anchor:

$$N_{mb} = \frac{A_{Nm}}{A_{Nmo}} \psi_{ed,N,m} \cdot \psi_{c,N,m} \cdot N_{b,m} \qquad (17.4.2.1a)$$

b. For a group of anchors:

$$N_{mbg} = \frac{A_{Nm}}{A_{Nmo}} \psi_{ec,N,m} \cdot \psi_{ed,N,m} \cdot \psi_{c,N,m} \cdot N_{b,m} \qquad (17.4.2.1b)$$

Factors $\psi_{ec,N,m}$, $\psi_{ed,N,m}$, $\psi_{c,N,m}$ are defined in *ACI 318 Section 17.4.2.4 (Section D.5.2.4)*, *ACI 318 Section 17.4.2.5 (Section D.5.2.5)*, and Section 3.3.2.8, respectively. A_{Nm} is the projected masonry failure area of a single anchor or group of anchors that shall be approximated as the base of the rectilinear geometrical figure that results from projecting the failure surface outward 1.5 h_{ef} from the centerlines of the anchor, or, in the case of a group of anchors, from a line through a row of adjacent anchors. A_{Nm} shall not exceed $n \cdot A_{Nmo}$, where n is the number of anchors in the group that resist tension. A_{Nmo} is the projected masonry failure area of a single anchor with an edge distance equal to or greater than 1.5 h_{ef} .

$$A_{Nmo} = 9h_{ef}^2 \qquad (17.4.2.1c)$$

3.3.2.12 *In lieu of ACI 318 Section 17.4.2.2 (Section D.5.2.2):* The basic masonry breakout strength of a single anchor in tension in cracked masonry, $N_{b,m}$, shall not exceed:

$$N_{b,m} = k_m \sqrt{f'_m}\, h_{ef}^{1.5} \qquad (17.4.2.2a)$$

where

k_m = effectiveness factor for breakout strength in masonry
= $\alpha_{masonry} \cdot k_c$

k_c = effectiveness factor for breakout strength in concrete
= 17; and

$\alpha_{masonry}$ = reduction factor for the inhomogeneity of masonry materials in breakout and bond strength determination.
= 0.7

3.3.2.13 *ACI 318 Section 17.4.2.3-17.4.2.5 (Section D.5.2.3-D.5.2.5)* apply with the general changes prescribed in Section 3.2.2.

3.3.2.14 In lieu of *ACI 318 Section 17.4.2.6 (Section D.5.2.6)*: For anchors located in a region of a masonry member where analysis indicates no cracking at service load levels, the following modification factor shall be permitted:

$\psi_{c,N,m} = 1.4$ for post-installed anchors, where $k_m = \alpha_{masonry} \cdot k_c$ as defined in Section 3.3.2.6.

3.3.2.15 *ACI 318 Section 17.4.2.7-17.4.2.9 (Section D.5.2.7-D.5.2.9)* apply with the general changes prescribed in Section 3.2.2.

3.3.2.16 In lieu of *ACI 318 Section 17.4.5.1 (Section D.5.5.1)*: The nominal bond strength in tension, N_{ma} , of a single anchor or N_{mag} of a group of anchors, shall not exceed:

a) For a single anchor:

$$N_{ma} = \frac{A_{Na}}{A_{Nao}} \psi_{ed,Na} \cdot N_{ba,m} \qquad (17.4.5.1a)$$

b) For a group of anchors:

$$N_{mag} = \frac{A_{Na}}{A_{Nao}} \psi_{ec,Na} \cdot \psi_{ed,Na} \cdot N_{ba,m} \qquad (17.4.5.1b)$$

Factors $\psi_{ec,Na}$ and $\psi_{ed,Na}$ are defined in *ACI 318 Section 17.4.5.3 (Section D.5.5.3)* and *ACI 318 Section 17.4.5.4 (Section D.5.5.4)*, respectively. A_{Na} is the projected influence area of a single anchor or group of anchors that shall be approximated as a rectilinear area that projects outward a distance c_{Na} from the centerlines of the anchor, or in the case of a group of anchors, from a line through a row of adjacent anchors. A_{Na} shall not exceed nA_{Nao}, where n is the number of anchors in the group that resist tension. A_{Nmo} is the projected masonry failure area of a single anchor with an edge distance equal to or greater than c_{Na}.

$$A_{Nao} = \left(2c_{Na}\right)^2 \qquad (17.4.5.1c)$$

where

$$c_{Na} = 10d_a\sqrt{\frac{\tau_{uncr}}{1100}} \qquad (17.4.5.1d)$$

and constant 1100 carries the unit of lb./in.^{2}

3.3.2.17 In lieu of *ACI 318 Section 17.4.5.2 (Section D.5.5.2)*: The basic bond strength of a single adhesive anchor in cracked masonry, $N_{ba,m}$, shall not exceed:

$$N_{ba,m} = \tau_{cr,m} \cdot \pi \cdot d_a \cdot h_{ef} \qquad (17.4.5.2)$$

The characteristic bond stresses $\tau_{cr,m}$ shall be taken as the value of $\tau_{k,cr}$ determined in accordance with Eq. (8-17) of AC58. Where analysis indicates cracking at service load levels, adhesive anchors shall be qualified for use in cracked masonry in accordance with AC58. For adhesive anchors located in a region of a masonry member where analysis indicates no cracking at service load levels, $\tau_{uncr,m}$ shall be permitted to be used in place of $\tau_{cr,m}$ in *ACI 318-14 Eq. 17.4.5.2 (ACI 318-11 Eq. D-22)* and shall be taken as the value of $\tau_{k,uncr}$ determined in accordance with Eq. (8-17).

3.3.2.18 The following apply with the general changes prescribed in Section 3.2.2:

1. *ACI 318 Section 17.4.5.3-17.4.5.4 (Section D.5.5.3-D.5.5.4).*
2. *ACI 318 Section 17.5.1.1-17.5.2.2 (Section D.6.1.1-D.6.2.2)*.
3. *ACI 318 Section 17.5.2.4-17.5.2.6 (Section D.6.2.4-D.6.2.6).*
4. *ACI 318 Section 17.5.2.8 (Section D.6.2.8).*
5. *ACI 318 Section 17.5.3 (Section D.6.3).*
6. *ACI 318 Section 17.6 (Section D.7).*
7. *ACI 318 Section 17.8.1 (Section D.9.1).*

3.3.2.19 ***[In addition to the ACI 318 provisions]*** *Masonry crushing strength for anchors in shear*—The nominal strength of an anchor in shear as governed by masonry crushing, V_{mc}, shall be calculated using Eq. (3-1).

$$V_{mc} = 1750\sqrt[4]{f'_m A_b} \quad (3\text{-}1)$$

3.3.2.20 In lieu of *ACI 318 Section 17.8.2.1 (Section D.9.2.1):* The construction documents shall specify all parameters associated with the characteristic bond stress used for design in accordance with Section 3.3.2.16 and Section 3.3.2.17, including minimum age of masonry; masonry temperature range; moisture condition of masonry at time of installation; type of lightweight masonry, if applicable; and requirements for hole drilling and preparation.

3.3.2.21 *ACI 318 Section 17.8.2.4 (Section D.9.2.4)* apply with the general changes prescribed in Section 3.2.2.

3.4 Strength design of qualified post-installed adhesive anchors in ungrouted concrete masonry unit construction:

3.4.1 Scope: This section provides strength design requirements for anchors used in ungrouted concrete masonry unit construction, where anchors are used to transmit structural loads by means of tension, shear, or a combination of tension and shear.

3.4.2 General:

3.4.2.1 The use of a screen tube or similar device to prevent unrestricted flow of adhesive is required.

3.4.2.2 Anchors shall be designed for critical effects of factored loads as determined by elastic analysis. Plastic analysis shall not be permitted.

3.4.2.3 Group effects shall not be considered.

Dimensional requirements specified in Table 3.3 shall be observed for the design of individual anchors as follows:

3.4.2.3.1 The critical edge distance, $c_{cr,ug}$, is the smallest edge distance to consider full capacity of an individual anchor and the minimum edge distance, $c_{a,\min,ug}$. For anchors installed with edge distances between $c_{cr,ug}$ and $c_{a,\min,ug}$, capacities shall be linearly interpolated. The minimum distance from hollow head joints (Section 1.4.23.1) shall be 2 inches (50.8 mm) as illustrated in Figure 3.2.

3.4.2.3.2 For anchor spacings less than the minimum spacing, $s_{\min,ug}$, to consider contributions of multiple anchors, the strength of the group shall equal the strength of a single anchor.

TABLE 3.3—DIMENSIONAL REQUIREMENTS FOR ADHESIVE ANCHORS INSTALLED IN UNGROUTED CMU

Load case	Critical edge distance, $c_{cr,ug}$, for full capacity	Minimum edge distance, $c_{a,\min,ug}$	Multiplier at $c_{a,\min,ug}$	Minimum spacing, $s_{\min,ug}$
Tension	4 in.	2 in.	0.8	8 in.
Shear	$12\,d_b$	$6\,d_b$	0.5	8 in.

For SI: 1 inch = 25.4 mm

3.4.3 Seismic design requirements: The design of anchors in structures assigned to Seismic Design Category (SDC) C, D, E, or F shall satisfy the requirements of this section.

3.4.3.1 The provisions of this section do not apply to the design of anchors in plastic hinge zones of masonry structures under earthquake forces.

3.4.3.2 The anchor or group of anchors shall be designed for the maximum tension and shear obtained from the design load combinations that include E, with E_h increased by Ω_o. The anchor design tensile strength shall satisfy the tensile strength requirements of Section 3.4.3.3.

3.4.3.3 The anchor design tensile force for resisting earthquake forces shall be determined from consideration of (a) and (b) for the failure modes given in Table 3.4 assuming the masonry is cracked unless it can be demonstrated that the masonry remains uncracked.

(a) ϕN_{sa} for each anchor

(b) $0.75\phi N_{k,ug}$

where ϕ is in accordance with Section 3.3.2.3.

3.4.4 For anchors designed for sustained tensile loading, *ACI 318 Section 17.3.1.2 (Section D.4.1.2)* shall be satisfied, where $N_{k,ug}$ replaces N_{ba}. Inspection requirements for horizontal anchors designed for sustained tension loading shall be in accordance with *ACI 318 Section 17.8.2.4 (Section D.9.2.4).* Installers of such anchors shall be qualified for the installation of the anchor type used.

3.4.5 Strength design checks shall be in accordance with Table 3.4. In addition, the design of anchors shall satisfy Section 3.4.3 for earthquake loading and Section 3.4.4 for anchors designed for sustained tensile loading.

TABLE 3.4— REQUIRED STRENGTH OF ANCHORS IN UNGROUTED CMU CONSTRUCTION

Failure mode	Single anchor	Capacity reference
Steel strength in tension	$\phi N_{sa} \geq N_{ua}$	Section 8.6
Pullout strength in tension	$\phi N_{k,ug} \geq N_{ua}$	Section 8.5.5
Steel strength in shear	$\phi V_{sa} \geq V_{ua}$	*ACI 318 Section 17.5.1.2 (Section D.6.1.2)*
Anchorage strength in shear	$\phi V_{s,ug} \geq V_{ua}$	Section 8.7.2.2
Masonry crushing strength in shear	$\phi V_{mc,ug} \geq V_{ua}$	Eq. (3-1)

3.4.6 The strength reduction factors, ϕ, prescribed in Section 3.3.2.3 parts a), b), and d) shall be used for anchors in ungrouted masonry when the LRFD load combinations of ASCE 7 are used.

3.4.7 Design requirements for tensile loading:

3.4.7.1 Steel strength of anchors in tension: The provisions of ACI *318 Section 17.4.5.1 (Section D.5.1)* shall apply.

3.4.7.2 Bond strength of anchors in tension: The nominal bond strength in tension, $N_{k,ug}$, shall be derived from assessment in accordance with Section 8.5.5.

3.4.8 Design requirements for shear loading:

3.4.8.1 Steel strength of anchors in shear: The nominal steel strength of an anchor in shear, V_{sa}, shall be determined in accordance with *ACI 318 Section 17.5.1.2b (Section D.6.1.2b).*

3.4.8.2 Anchorage strength in shear: The nominal strength of an anchor in shear, $V_{s,ug}$, shall be derived from assessment in accordance with AC58 Section 8.7.2.2.

3.4.8.3 Masonry crushing strength of anchors in shear: The nominal strength of an anchor in shear as governed by masonry crushing, $V_{mc,ug}$, shall be determined by Eq. (3-1).

3.4.9 Interaction of tensile and shear forces: Anchors designed for combinations of tensile and shear forces shall satisfy the provisions of *ACI 318 Section 17.6 (Section D.7)*.

3.4.10 Installation and inspection of anchors: The provisions of *ACI 318 Section 17.8.1 (Section D.9.1), 3.3.2.14,* and *ACI 318 Section 17.8.2.4 (Section D.9.2.4)* shall apply.

3.5 Strength design of anchors in partially grouted masonry:

3.5.1 Scope: This section provides strength design requirements for anchors used in partially grouted concrete masonry unit construction, where anchors are used to transmit structural loads by means of tension, shear, or a combination of tension and shear.

3.5.2 In all cases, the minimum distance from hollow head joints (Section 1.4.23.1) shall be 2 inches as illustrated in Figure 3.2.

3.5.3 For cases where the location of grouted cells is known, the following provisions shall apply:

1. Group effects shall not be considered between anchors in grouted masonry and anchors in ungrouted masonry.

2. Anchors located in grouted cells shall be designed in accordance with Section 3.3, whereby the distance to the extent of the ungrouted cell shall be taken as a free edge as illustrated in Figure 3.3.

3. Anchors in ungrouted cells shall be designed in accordance Section 3.4, whereby the use of a screen tube or similar device to prevent unrestricted flow of adhesive is required.

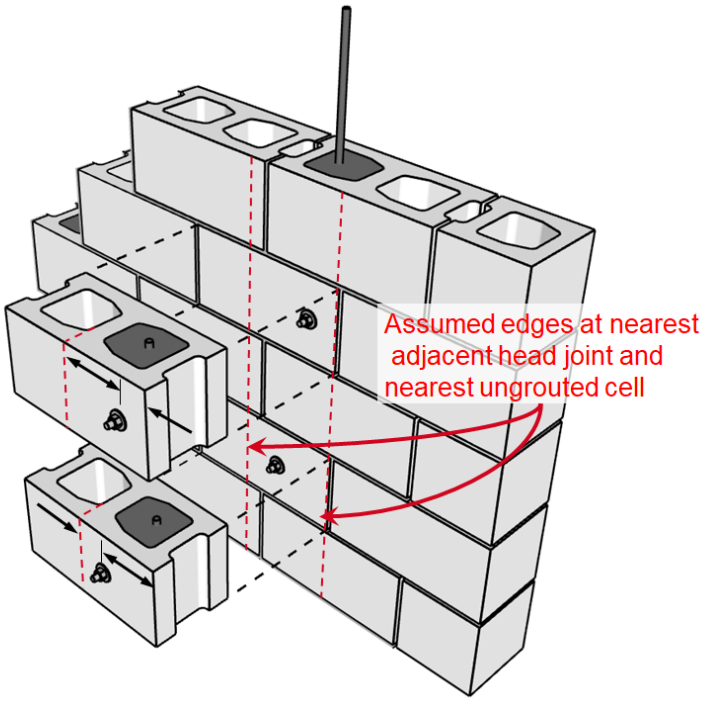

FIGURE 3.3— EDGE DISTANCE CONSIDERATIONS IN PARTIALLY GROUTED CMU CONSTRUCTION WHEN THE LOCATION OF GROUT IS KNOWN

3.5.4 For cases where the location of grouted cells is unknown, the design of anchors shall be in accordance with Section 3.4.

3.6 Strength design of anchors in clay brick masonry construction:

3.6.1 Scope: This section provides strength design requirements for anchors used in clay brick masonry construction, where anchors are used to transmit structural loads by means of tension, shear, or a combination of tension and shear.

3.6.2 General:

3.6.2.1 The use of a screen tube or similar device to prevent unrestricted flow of adhesive is required.

3.6.2.2 Anchors shall be designed for critical effects of factored loads as determined by elastic analysis. Plastic analysis shall not be permitted.

3.6.2.3 Group effects shall not be considered. Dimensional requirements specified in Table 3.5 shall be observed for the design of individual anchors.

3.6.2.3.1 The critical edge distance, $c_{cr,br}$, is the smallest edge distance to consider full capacity of an individual anchor and the minimum edge distance, $c_{a,\min,br}$. For anchors installed with edge distances between $c_{cr,br}$ and $c_{a,\min,br}$, capacities shall be linearly interpolated.

3.6.2.3.2 For anchor spacings less than the minimum spacing, $s_{\min,br}$, to consider contributions of multiple anchors, the strength of the group shall equal the strength of a single anchor.

TABLE 3.5—DIMENSIONAL REQUIREMENTS FOR ADHESIVE ANCHORS INSTALLED IN BRICK MASONRY CONSTRUCTION

Load case	Critical edge distance, $c_{cr,br}$, for full capacity	Minimum edge distance, $c_{a,\min,br}$	Multiplier at $c_{a,\min,br}$	Minimum spacing, $s_{\min,br}$
Tension	$\max\left(2h_{ef}, 4in.\right)$	4 in.	0.8	8 in.
Shear	$12\,d_b$	$6\,d_b$	0.5	8 in.

For SI: 1 inch = 25.4 mm

3.6.3 Seismic design requirements: The design of anchors in structures assigned to Seismic Design Category (SDC) C, D, E, or F shall satisfy the requirements of this section.

3.6.3.1 The design of anchors in the plastic hinge zones of masonry structures under earthquake forces is beyond the scope of these acceptance criteria.

3.6.3.2 The anchor or group of anchors shall be designed for the maximum tension and shear obtained from the design load combinations that include E, with E_h increased by Ω_o. The anchor design tensile strength shall satisfy the tensile strength requirements of Section 3.6.3.3.

3.6.3.3 The anchor design tensile force for resisting earthquake forces shall be determined from consideration of (a) and (c) for the failure modes given in Table 3.6 assuming the masonry is cracked unless it can be demonstrated that the masonry remains uncracked.

(a) ϕN_{sa} for each anchor

(b) $0.75\phi N_{k,br}$

where ϕ is in accordance with Section 3.3.2.3

3.6.4 For anchors designed for sustained tensile loading, *ACI 318 Section 17.3.1.2 (Section D.4.1.2)* shall be satisfied, where $N_{k,br}$ replaces N_{ba}. Inspection requirements for horizontal anchors designed for sustained tension loading shall be in accordance with *ACI 318 Section 17.8.2.4 (Section D.9.2.4).* Installers of such anchors shall be qualified for the installation of the anchor type used.

3.6.5 Strength design checks shall be in accordance with Table 3.6. In addition, the design of anchors shall satisfy Section 3.6.3 for earthquake loading and Section 3.6.4 for anchors designed for sustained tensile loading.

TABLE 3.6— REQUIRED STRENGTH OF ANCHORS IN BRICK MASONRY CONSTRUCTION

Failure mode	Single anchor	Reference
Steel strength in tension	$\phi N_{sa} \geq N_{ua}$	Section 8.6
Pullout strength in tension	$\phi N_{k,br} \geq N_{ua}$	Section 8.5.6
Steel strength in shear	$\phi V_{sa} \geq V_{ua}$	*ACI 318 Section 17.5.1.2 (Section D.6.1.2)*
Anchorage strength in shear	$\phi V_{s,br} \geq V_{ua}$	Section 8.7.2.3
Brick crushing strength in shear	$\phi V_{mc,br} \geq V_{ua}$	(3-1)

3.6.6 The strength reduction factors, ϕ, prescribed in Section 3.3.2.3 parts a), b), and d) shall be used for anchors in ungrouted masonry when the LRFD load combinations of ASCE 7 are used.

3.6.7 Design requirements for tensile loading:

3.6.7.1 Steel strength of anchors in tension: The provisions of *ACI 318 Section 17.4.5.1 (Section D.5.1)* shall apply.

3.6.7.2 Bond strength of anchors in tension: The nominal bond strength in tension, $N_{k,br}$, shall be derived from assessment in accordance with Section 8.5.6.

3.6.8 Design requirements for shear loading:

3.6.8.1 Steel strength of anchors in shear: The nominal steel strength of an anchor in shear, V_{sa} , shall be determined in accordance with *ACI 318 Section 17.5.1.2b (Section D.6.1.2b).*

3.6.8.2 Anchorage strength in shear—The nominal strength of an anchor in shear, $V_{s,br}$, shall be derived from assessment in accordance with Section 8.7.2.3.

3.6.8.3 Brick crushing strength of anchors in shear—The nominal strength of an anchor in shear as governed by masonry crushing, $V_{mc,br}$, shall be evaluated by Eq. (3-1).

3.6.9 Interaction of tensile and shear forces—Anchors designed for combinations of tensile and shear forces shall satisfy the provisions of *ACI 318 Section 17.6 (Section D.7)*.

3.6.10 Installation and inspection of anchors—The provisions of *ACI 318 Section 17.8.1 (Section D.9.1), 3.3.2.14*, and *ACI 318 Section 17.8.2.4 (Section D.9.2.4)* shall apply.

3.7 Conversion of strength design to allowable stress design:

3.7.1 For adhesive anchors designed using load combinations in accordance with IBC Section 1605.3 (Allowable Stress Design) allowable loads shall be established using the equations below:

$$T_{allowable,ASD} = \frac{\phi N_n}{\alpha} \quad (3\text{-}2)$$

and

$$V_{allowable,ASD} = \frac{\phi V_n}{\alpha} \quad (3\text{-}3)$$

where

$T_{allowable,ASD}$ = Allowable tensile load (lb. or kN);

$V_{allowable,ASD}$ = Allowable shear load (lb. or kN);

N_n = Lowest design strength of an anchor or anchor group in tension as determined in accordance with Table 3.2, Table 3.4, or Table 3.6, as applicable, and 2015 IBC Section 1905.1.8 and 2012 IBC Section 1905.1.9 (lb. or kN);

V_n = Lowest design strength of an anchor or anchor group in shear as determined in accordance with Table 3.2, Table 3.4, or Table 3.6, as applicable, and 2015 IBC Section 1905.1.8 and 2012 IBC Section 1905.1.9 (lb or kN);

α = Conversion factor calculated as a weighted average of the load factors for the controlling load combination. In addition, α shall include all applicable factors to account for non-ductile failure modes and required overstrength; and

ϕ = relevant strength reduction factor for load case and Anchor Category

3.7.2 Interaction shall be calculated in compliance with *ACI 318-11 Section D.7 or ACI 318-14 Section 17.6* as follows:

3.7.2.1 For shear loads $V \leq 0.2V_{allowable,ASD}$, the full allowable load in tension shall be permitted.

3.7.2.2 For tensile loads $T \leq 0.2T_{allowable,ASD}$, the full allowable load in shear shall be permitted.

3.7.2.3 For all other cases: $\frac{T}{T_{allowable}} + \frac{V}{V_{allowable}} \leq 1.2$

4.0 GENERAL TESTING REQUIREMENTS

4.1 Test organization:

4.1.1 Four types of tests are required:

1. Identification tests.
2. Reference tests:
   - *Grouted CMU:* confined tension tests to establish bond values in grouted CMU and use as a basis for comparison in reliability and service-condition tests.
   - *Ungrouted CMU and brick:* unconfined tension tests to establish nominal capacities, confined tests to use as a basis for comparison in confined reliability and service-condition tests.
3. Reliability tests: confined tension tests to establish sensitivity of the system to various conditions.

4. Service-condition tests: confined tension and shear tests to establish service condition values not derivable from reference and reliability tests.

4.1.2 In addition, the following tests are required on a conditional basis:

5. Supplementary tests for multiple anchor element material types (Section 4.4).

6. Supplementary tests for multiple drilling methods (Section 4.5).

7. Supplementary tests for rebar as an anchor element (Section 4.6).

4.2 Variables and options:

4.2.1 The assessment of a given anchor system in accordance with this criteria will involve consideration of the following system variables:

1. Masonry types: Options are limited to grouted CMU, ungrouted CMU, and brick masonry.

2. *Installation procedures*: Hole cleaning procedures specified in the anchor MPII. Such procedures typically include vacuuming, evacuation with forced air and brushing. Quantification of the number, order, and duration of cleaning operations and description of the equipment to be used is required. The default installation condition for verification of the hole cleaning procedure is dry masonry. Options include installation in saturated masonry.

3. *Drilling method*: The default drilling method employs a rotary hammer drill with a carbide bit. For other drilling methods (e.g., core drilling), refer to Section 4.5.

4. *Installation temperature: The* default masonry temperature range during anchor installation is 50 to 80˚F (10 to 27 ˚C). Options include installation at lower masonry temperatures. (Section 7.5).

5. *Embedment depth and anchor diameter:* The anchor diameters and associated *embedment* depth range shall be specified by the manufacturer within the ranges permitted by this criteria (Section 1.0).

6. *Anchor element type:* Material types (carbon, stainless), strengths and geometries (threaded rod, reinforcing bar, and internally threaded inserts).

7. *Environmental use conditions:* Default conditions are dry and wet *environments* with service temperatures ranging from -40˚F (-40˚C) to the maximum long- and short-term service temperatures corresponding to the Temperature Categories specified in Table 7.1.

8. *Chemical exposure*: The default exposure condition is high alkalinity in a wet environment. The optional exposure condition is sulfur dioxide (Section 7.7.2.2.2).

9. *Masonry condition*: Options are limited to cracked and uncracked masonry.

10. *Loading: Default* loading conditions are quasi-static loading including sustained loads. Qualification for seismic loading is optional in conjunction with qualification for cracked masonry (Sections 7.8 and 7.10).

11. *Drilling depth*: The maximum drilling depth, $h_{o,\max}$, shall be taken as $h_{o,\max} = t_{wall} - \Delta_h$.

12. *Wall location*: The default condition is in the face of the wall. Optional testing for the top of the wall and the end of the wall is provided in Section7.11.

4.3 Testing requirements:

4.3.1 Test requirements for recognition to resist static loads and wind loads in uncracked CMU construction are defined in Table 4.1.

4.3.2 Test requirements for recognition to resist static loads and wind loads in cracked CMU construction conditions are defined in Table 4.2.

4.3.3 Test requirements for recognition of CMU construction to resist seismic loads are defined in Table 4.2; Table 4.1 must not be used to qualify anchors to resist seismic loads.

4.3.4 Test requirements for recognition to resist static loads, wind loads, and seismic loads in uncracked and cracked ungrouted CMU construction conditions are defined in Table 4.3.

4.3.5 Test requirements for recognition to resist static loads, wind loads, and seismic loads in uncracked and cracked brick masonry construction conditions are defined in Table 4.4.

TABLE 4.1—TEST PROGRAM FOR EVALUATING ADHESIVE ANCHOR SYSTEMS FOR USE IN UNCRACKED SOLID-GROUTED CMU CONSTRUCTION

Testing						Assessment					
Test no.	**Test ref.**	**Purpose**	**Test param.**	**Location**	**Masonry‡**	α_{req}	**Load & displ.**	h_{ef} †	Dia.	Min. sample size	Batch
Reference tests											
1a	5.0	Reference bond str.	Confined tension	Center of cell	Uncracked	-	-	min max	all	5	1
1b	5.0	Reference bond str.	Confined tension	Bed joint	Uncracked	-	-	min	all	5	2
1c	5.0	Reference bond str.	Confined tension	Web	Uncracked	-	-	min	all	5	3
1d‖	7.11	Reference bond str.	Confined tension	Top of wall	Uncracked	-	-	min max	all	5	4
Reliability tests											
2a	6.5.1	Hole cleaning, dry	Confined tension	Center of cell	Uncracked	6.5.3	8.5	max	SML*	5	1
2b	6.5.2	Hole cleaning, saturated	Confined tension	Center of cell	Uncracked	6.5.3	8.5	max	SML*	5	1
2c§	6.6	Mixing effort	Confined tension	Center of cell	Uncracked	6.5.3	8.5	max	1/2+	5	1
3	6.7	Freezing and thawing	Confined tension	Cylinder	Uncracked	0.9	8.5 6.7.3	min	1/2+	5	5
4	6.9	Sustained load	Confined tension	Center of cell	Uncracked	0.9	8.5 6.9.5	min	1/2+	5	1
5§	6.10	Installation direction	Confined tension	Center of cell	Uncracked	0.9	8.5 6.10.4	max	L	5	1
6	6.11	Torque test	Confined tension	Center of cell	Uncracked	-	6.11.3	min	all	5	1
Service-condition tests											
7a§	7.4	Elevated temperature	Confined tension	Center of cell	Uncracked	-	8.5 7.4.3	min	1/2+	5	1
7b§‖	7.5	Decreased temperature	Confined tension	Center of cell	Uncracked	-	8.5 7.5.3	min	1/2+	5	1
7c§	7.6	Curing time at std. temp.	Confined tension	Center of cell	Uncracked	-	8.5 7.6.3	min	1/2+	5	1
8a§	7.7	Resistance to alkalinity	Confined tension	Cylinder	Uncracked	-	7.7.4	-	1/2+	10	6
8b§‖	7.7	Resistance to sulfur	Confined tension	Cylinder	Uncracked	-	7.7.4	-	1/2+	10	6
9a/	8.9	Static shear away from edges	Shear	Bed joint	Uncracked	-	7.9.3	min	all	5	7
9b‖	7.11	Static shear, top of wall	Shear parallel	Top of wall	Uncracked	-	7.11	min	all	5	8

For **SI:** 1 inch = 25.4 mm, 1 psi = 6.89 kPa.

† Where MPII specify multiple embedment depths for single anchor diameter, test anchor at minimum or maximum embedment depth as noted.

* Where recognition is sought for a maximum of 4 anchor diameters, only the smallest and largest diameters are required to be tested.

S = smallest anchor element diameter for which recognition is sought.

M = middle anchor element diameter for which recognition is sought.

L = largest anchor element diameter for which recognition is sought.

+ Test the nominal 1/2 in.(12.7 mm) diameter or the smallest nominal diameter if it is larger than 1/2 in. (12.7 mm).

§ It shall be permitted to use the results of tests performed in concrete in accordance with AC308 using the same adhesive and drilling method.

‖ Optional test.

/ Test is only required for anchors with nonuniform cross-sections and for internally threaded inserts.

‡ Anchors shall be normalized to grout and unit strengths of 2,000 psi (13.8 MPa) in accordance with Section 8.3.

TABLE 4.2— TEST PROGRAM FOR EVALUATING ADHESIVE ANCHOR SYSTEMS FOR USE IN CRACKED AND UNCRACKED SOLID-GROUTED CMU CONSTRUCTION

Testing							Assessment					
Test no.	Test ref.	**Purpose**	**Test param.**	**Location**	**Masonry‡**	**Crack width** in. (mm)	α_{req}	**Load & displ.**	h_{ef} †	Dia.	Min. samp. size	Batch
Reference tests												
1a	5.0	Reference bond str.	Confined tension	Center of cell	Uncracked	-	-	-	min max	all	5	1
1b	5.0	Reference bond str.	Confined tension	Bed joint	Uncracked	-	-	-	min	all	5	2
1c	5.0	Reference bond str.	Confined tension	Web	Uncracked	-	-	-	min	all	5	3
1d‖	7.11	Reference bond str.	Confined tension	Top of wall	Uncracked	-	-	-	min	all	5	4
1e	5.0	Reference cracked bond str.	Confined tension	Bed joint	Cracked	0.012 (0.3)	-	-	min	all	5	2
Reliability tests												
2a	6.5.1	Hole cleaning, dry	Confined tension	Center of cell	Uncracked	-	6.5.3	8.5	max	SML*	5	1
2b	6.5.2	Hole cleaning, saturated	Confined tension	Center of cell	Uncracked	-	6.5.3	8.5	max	SML*	5	1
2c§	6.6	Mixing effort	Confined tension	Center of cell	Uncracked	-	6.5.3	8.5	max	1/2+	5	1
3	6.7	Freezing and thawing	Confined tension	Center of cell	Uncracked	-	0.9	8.5 6.7.3	min	1/2+	5	5
4	6.8	Cracked bond str.	Confined tension	Bed joint	Cracked	0.020 (0.5)	0.8	8.5	min	SML	5	2
5	6.9	Sustained load	Confined tension	Center of cell	Uncracked	-	0.9	8.5 6.9.5	min	1/2 +	5	1
6§	6.10	Installation direction	Confined tension	Center of cell	Uncracked	-	0.9	8.5 6.10.4	max	L	5	1
7	6.11	Torque test	Confined tension	Center of cell	Uncracked	-	-	6.11.3	min	all	5	1
Service-condition tests												
8a§	7.4	Elevated temp.	Confined tension	Center of cell	Uncracked	-	-	8.5 7.4.3	min	1/2+	5	1
8b§‖	7.5	Decreased. temp.	Confined tension	Center of cell	Uncracked	-	-	8.5 7.5.3	min	1/2+	5	1
8c§	7.6	Cure time, std. temp.	Confined tension	Center of cell	Uncracked	-	-	8.5 7.6.3	min	1/2+	5	1
9a§	7.7	Resistance to alkalinity	Confined tension	Cylinder	Uncracked	-	-	7.7.4	-	1/2+	10	6
9b§‖	7.7	Resistance to sulfur	Confined tension	Cylinder	Uncracked	-	-	7.7.4	-	1/2+	10	6
10‖	7.8	Seismic tension	Confined cyclic tension, confined residual test	Bed joint	Cracked	0.020 (0.5)	-	8.5 7.8.4	min	all	5	2
11a/	7.9	Static shear away from edges	Shear	Bed joint	Uncracked	-	-	7.9.3	min	all	5	7
11b‖	7.11	Static shear, top of wall	Shear parallel	Top of wall	Uncracked	-	-	7.11	min	all	5	8
12‖	7.10	Seismic shear	Cyclic shear, residual test	Bed joint	Cracked	0.020 (0.5)	-	7.10.6	min	SML*	5	7

For **SI:** 1 inch = 25.4 mm, 1 psi = 6.89 kPa.

† Where MPII specify multiple embedment depths for single anchor diameter, test anchor at minimum or maximum embedment depth as noted.

* Where recognition is sought for a maximum of 4 anchor diameters, only the smallest and largest diameters are required to be tested.

S = smallest anchor element diameter for which recognition is sought.

M = middle anchor element diameter for which recognition is sought.

L = largest anchor element diameter for which recognition is sought.

+ Test the nominal 1/2 in. (12.7 mm) diameter or the smallest nominal diameter if it is larger than 1/2 in. (12.7 mm).

§ It shall be permitted to use the results of tests performed in concrete in accordance with AC308 using the same adhesive and drilling method.

‖ Optional test.

/ Test is only required for anchors with nonuniform cross-sections and for internally threaded inserts.

‡ Anchors shall be normalized to grout and unit strengths of 2,000 psi (13.8 MPa) in accordance with Section 8.3.

TABLE 4.3—TEST PROGRAM FOR EVALUATING ADHESIVE ANCHOR SYSTEMS FOR USE IN UNCRACKED, UNGROUTED CMU CONSTRUCTION

Testing						Assessment					
Test no.	**Test ref.**	**Purpose**	**Test param.**	**Location**	**Masonry‡**	α_{req}	**Load & displ.**	h_{ef} †	Dia.	Min. sample size	Batch
Reference tests											
1a	5.0	Reference strength	Unconfined tension	Center of cell	Uncracked	-	-	all	all	5	1
1b	5.0	Reference strength	Unconfined tension	Bed joint	Uncracked	-	-	all	all	5	2
1c	5.0	Reference strength	Unconfined tension	Web	Uncracked	-	-	all	all	5	3
1d	5.0	Reference strength	Confined tension	Center of cell	Uncracked	-	-	min max	1/2+ L	5	4
1e×	5.0	Reference strength	Confined tension	Web	Uncracked	-	-	max	SML*	5	5
Reliability tests											
2a#	6.5.1	Hole cleaning, dry	Confined tension	Web	Uncracked	6.5.3	8.5	max	SML*	5	5
2b#	6.5.2	Hole cleaning, saturated	Confined tension	Web	Uncracked	6.5.3	8.5	max	SML*	5	5
2c§#	6.6	Mixing effort	Confined tension	Center of cell	Uncracked	6.5.3	8.5	max	1/2+	5	4
3^#	6.7	Freezing and thawing	Confined tension	Cylinder	Uncracked	0.9	8.5 6.7.3	min	1/2+	5	6
4	6.9	Sustained load	Confined tension	Center of cell	Uncracked	0.9	8.5 6.9.5	min	1/2+	5	4
5	6.10	Installation direction	Confined tension	Center of cell	Uncracked	0.9	8.5 6.10.4	max	L	5	4
Service-condition tests											
6a	7.4	Elevated temperature	Confined tension	Center of cell	Uncracked	-	8.5 7.4.3	min	1/2+	5	4
6b	7.5	Decreased temperature	Confined tension	Center of cell	Uncracked	-	8.5 7.5.3	min	1/2+	5	4
6c§#	7.6	Curing time at std. temp.	Confined tension	Center of cell	Uncracked	-	8.5 7.6.3	min	1/2+	5	4
7a^#§	7.7	Resistance to alkalinity	Confined tension	Cylinder	Uncracked	-	7.7.4	-	1/2+	10	5
7b^#§‖	7.7	Resistance to sulfur	Confined tension	Cylinder	Uncracked	-	7.7.4	-	1/2+	10	5
8‖	7.8	Seismic tension	Unconfined cyclic tension, unconfined residual test	Center of cell	Uncracked	-	8.5 7.8.4	-	all	5	1
9/	7.9	Static shear away from edges	Shear	Bed joint	Uncracked	-	7.9.3	min	all	5	7
10‖/	7.10	Seismic shear	Cyclic shear, residual test	Bed joint	Uncracked	-	7.10.6	min	SML*	5	7

For **SI:** 1 inch = 25.4 mm, 1 psi = 6.89 kPa.

† Where MPII specify multiple embedment depths for single anchor diameter, test anchor at minimum or maximum embedment depth as noted.

+ Test the nominal 1/2 in. (12.7 mm) diameter or the smallest nominal diameter if it is larger than 1/2 in. (12.7 mm).

× This test may be omitted if tests 2a and 2b are not conducted. (See note #.)

* Where recognition is sought for a maximum of 4 anchor diameters, only the smallest and largest diameters are required to be tested.

S = smallest anchor element diameter for which recognition is sought.

M = middle anchor element diameter for which recognition is sought.

L = largest anchor element diameter for which recognition is sought.
[#] It shall be permitted to use the results of tests performed in grouted masonry in accordance with Table 4.1 or Table 4.2 using the same adhesive.
^ Test not conducted in ungrouted CMU; see test description for material preparation conditions.
[§] It shall be permitted to use the results of tests performed in concrete in accordance with AC308 using the same adhesive.
[‖] Optional test.
[/] Test is only required for anchors with nonuniform cross-sections and for internally threaded inserts.
‡ Anchors shall be normalized to a unit strength of 2,000 psi (13.8 MPa) in accordance with Section 8.3..

TABLE 4.4—TEST PROGRAM FOR EVALUATING ADHESIVE ANCHOR SYSTEMS FOR USE IN BRICK WALL CONSTRUCTION↗

Testing						Assessment					
Test no.	**Test ref.**	**Purpose**	**Test param.**	**Location**	**Masonry‡**	α_{req}	**Load & displ.**	h_{ef} †	Dia.	Min. samp. size	Batch
Reference tests											
1a	5.0	Reference strength	Unconfined tension	Solid portion	Uncracked	-	-	all	all	5	1
1b×	5.0	Reference strength	Unconfined tension	Hollow portion	Uncracked	-	-	all	all	5	2
1c	5.0	Reference strength	Unconfined tension	Bed joint	Uncracked	-	-	all	all	5	3
1d×	5.0	Reference strength	Unconfined tension	Head joint	Uncracked	-	-	all	all	5	4
1e×	5.0	Reference strength	Confined tension	Hollow portion	Uncracked	-	-	min max	1/2+, L	5	5
1f	5.0	Reference strength	Confined tension	Solid portion	Uncracked	-	-	max	SML*	5	6
Reliability tests											
2a	6.5.1	Hole cleaning, dry	Confined tension	Solid portion	Uncracked	6.5.3	8.5	max	SML*	5	6
2b	6.5.2	Hole cleaning, saturated	Confined tension	Solid portion	Uncracked	6.5.3	8.5	max	SML*	5	6
2c	6.6	Mixing effort	Confined tension	Center of cell	Uncracked	6.5.3	8.5	max	1/2+	5	4
3	6.7	Freezing and thawing	Confined tension	Cylinder	Uncracked	0.9	8.5 6.7.3	min	1/2+	5	6
4	6.9	Sustained load	Confined tension	Hollow portion•	Uncracked	0.9	8.5 6.9.5	min	1/2+	5	5
5	6.10	Installation direction	Confined tension	Hollow portion•	Uncracked	0.9	8.5 6.10.4	max	L	5	5
Service-condition tests											
6a§	7.4	Elevated temperature	Confined tension	Hollow portion•	Uncracked	-	8.5 7.4.3	min	1/2+	5	5
6b§‖	7.5	Decreased temperature	Confined tension	Hollow portion•	Uncracked	-	8.5 7.5.3	min	1/2+	5	5
6c#§	7.6	Curing time at std. temperature	Confined tension	Hollow portion•	Uncracked	-	8.5 7.6.3	min	1/2+	5	5
7a^#§	7.7	Resistance to alkalinity	Confined tension	Cylinder	Uncracked	-	7.7.4	-	1/2+	10	7
7b^#§‖	7.7	Resistance to sulfur	Confined tension	Cylinder	Uncracked	-	7.7.4	-	1/2+	10	7
8‖	7.8	Seismic tension	Unconfined cyclic tension, unconfined residual test	Hollow portion•	Uncracked	-	8.5 7.8.4	-	all	5	5
9	7.9	Static shear away from edges	Shear	Bed joint, loaded parallel to bed joint	Uncracked	-	7.9.3	min	all	5	8
10‖	7.10	Seismic shear	Shear	Bed joint, loaded parallel to bed joint	Uncracked	-	7.10.6	min	all	5	8

For **SI:** 1 inch = 25.4 mm, 1 psi = 6.89 kPa.

↗ Reported values from this test program are only valid for brick construction with all of the following characteristics: same material type (e.g., clay/shale/similar), equal or greater compressive strength (ASTM C67 for clay/shale/similar, ASTM C140 for concrete materials), equal or greater ratios of brick unit net cross-sectional area to gross cross-sectional area, and equal or greater number of wythes used in testing. For additional qualification of brick construction types, refer to Section 4.7.

† Where MPII specify multiple embedment depths for single anchor diameter, test anchor at minimum or maximum embedment depth as noted.

× This test shall be omitted if the net and gross cross-sectional area of the brick units are equal in all dimensions.

+ Test the nominal 1/2 in. (12.7 mm) diameter or the smallest nominal diameter if it is larger than 1/2 in. (12.7 mm).

* Where recognition is sought for a maximum of 4 anchor diameters, only the smallest and largest diameters are required to be tested.

S = smallest anchor element diameter for which recognition is sought.

M = middle anchor element diameter for which recognition is sought.

L = largest anchor element diameter for which recognition is sought
• This test shall be installed in the solid portion if the net and gross cross-sectional area of the brick units are equal in all dimensions.
It shall be permitted to use the results of tests performed in grouted masonry in accordance with **Table 4.1** or **Table 4.2** using the same adhesive.
^ Test not conducted in brick; see test description for material preparation conditions.
§ It shall be permitted to use the results of tests performed in concrete in accordance with AC308 using the same adhesive.
‖ Optional test.
‡ Anchors shall be normalized to the minimum brick unit strength permitted by the respective brick standard in accordance with Section 8.3..

4.4 Assessment for multiple anchor element material types:

4.4.1 In cases where the assessment encompasses multiple threaded rod anchor element types, the entire assessment shall be permitted to be performed with one anchor element material type; however, recognition of other anchor element material types shall be limited to those material types with measured elongation at break in accordance with ASTM F606 Section 3.6.5 exceeding the value for the tested anchor element unless separate static and seismic shear tests are performed.

4.5 Assessment for alternate drilling methods:

4.5.1 The qualification of the anchor for use with drilling methods other than carbide bit rotary-hammer drilling shall be predicated on fulfillment of the requirements of this section.

4.5.1.1 Perform tests accordance with Table 4.5 using the alternate drilling method. Install anchors in accordance with the MPII.

4.5.1.2 The results of supplemental tests as required in Section 4.5.1.1 shall be shown to be statistically equivalent (def. Section 1.4.31) to the results of corresponding tests conducted with carbide rotary-hammer bits in accordance with these criteria. If this requirement is not met, recognition of the

alternate drilling method is dependent on the successful completion of all tests as described in these criteria.

TABLE 4.5—REQUIRED SUPPLEMENTARY TESTS FOR EACH ALTERNATIVE DRILLING METHOD

Test type	h_{ef}	**Dia.**	**Table 4.1** Test No.	**Table 4.2** Test No.	**Table 4.3** Test no.	**Table 4.4** Test No.
Reference	min	all	1a	1a	1d	1e
			1b	1b	1e	1f
			1c	1c	-	-
			1d	1d	-	-
			-	1e	-	-
Reliability	max	1/2[+]	2a	2a	2a	2a
			2b	2b	2b	2b

[+] Test the nominal 1/2 in. (12.7 mm) diameter or the smallest nominal diameter if it is larger than 1/2 in. (12.7 mm).

4.6 Tests for recognition of deformed reinforcing bars and internally threaded inserts as anchor elements:

4.6.1 Perform tests on all diameters of additional anchor elements (deformed reinforcing bar elements and internally threaded inserts with external deformations) sought for recognition in accordance with Table 4.1, Table 4.2, Table 4.3, or Table 4.4.

Exception: If tests have been performed on a minimum of three diameters of threaded rod anchor elements in accordance with Table 4.1, Table 4.2, Table 4.3, or Table 4.4, it shall be permitted to obtain recognition for the use of deformed reinforcing bar anchor elements and internally threaded inserts corresponding to the tested range of threaded rod anchor element diameters as follows:

a. Except as determined in accordance with Table 4.6, reduction factors determined for threaded rod as applicable in Eqs. (8-17) through (8-34)

shall be applied to the bond strengths and shear strengths for reinforcing bar elements and internally threaded inserts.

b. Perform tests with deformed reinforcing bars and internally threaded inserts in accordance with Table 4.6. The range of reinforcing bar anchor element and internally threaded insert diameters tested shall correspond to the tested range of threaded rod anchor element diameters.

c. Demonstrate for all tested diameters that test results from tests in accordance with a. are statistically equivalent to (see Section 1.4.31) or exceed the tests with threaded rod anchor elements of equivalent diameters.

d. If it cannot be shown that the test tests in accordance with a. are statistically equivalent to or exceed the tests with threaded rod anchor elements for all equivalent diameters, adjust the characteristic tension bond stresses in uncracked and cracked masonry with the minimum ratio of the mean bond stress (Table 4.1 and Table 4.2) or mean bond strength (Table 4.3 and Table 4.4) for the tested deformed reinforcing bar and internally threaded insert element diameters to the mean bond stress for threaded rod diameters of equivalent diameter.

TABLE 4.6—MINIMUM REQUIRED TESTS FOR SUPPLEMENTARY RECOGNITION OF REINFORCING BARS AND INTERNALLY THREADED INSERTS AS ANCHOR ELEMENTS

Test type	h_{ef}	**Dia.**	**Table 4.1** Test No.	**Table 4.2** Test No.	**Table 4.3** Test no.	**Table 4.4** Test No.
Reference	min	all	1a	1a	1d	1e
			1b	1b	1e	1f
			1c	1c	-	-
			1d	1d	-	-
			-	1e	-	-
Reliability		see footnote†	4	5	4	4
Service condition		SML*	9a	10#	8#	8#
			-	11a	-	9#⅄
			-	12#	-	10#

†For reinforcing bars, test #4 reinforcing bar or smallest nominal diameter if it is larger than #4. For internally threaded inserts, test #4 reinforcing bar or smallest nominal diameter if it is larger than #4. Tests may be omitted if the hole diameter specified for the corresponding reinforcing bar in the MPII is not more than 1/8-in. (3 mm) larger than the required hole diameter for the tested threaded rod diameter and the normalized bond strength for the reinforcing bar element is equal to or lower than the bond strength for threaded rod.

* Where recognition is sought for a maximum of 4 anchor diameters, only the smallest and largest diameters are required to be tested.

S = smallest anchor element diameter for which recognition is sought.

M = middle anchor element diameter for which recognition is sought.

L = largest anchor element diameter for which recognition is sought.

Where recognition for seismic design qualification is sought.

⅄ Test the series with the lowest characteristic capacity from tests 9a, 9b, and 9c of the original qualification.

4.7 Tests for recognition of additional brick construction types:

4.7.1 For each brick construction type sought for recognition, tests shall be performed on all diameters of anchor elements in accordance with Table 4.4, where, for the purposes of this document, brick construction type is defined in Section 1.4.11. Characteristic capacities from tests conducted with an anchor element in a given brick construction type shall be considered valid for additional untested brick construction types so long as all of the following conditions are fulfilled:

1. Any additional brick unit types (Section 1.4.12) are composed of the same material type (e.g., clay/shale/similar, concrete) to the originally tested brick unit type;

2. The additional brick unit types are of equal or greater compressive strength (ASTM C67 for clay/shale/similar, ASTM C140) to the originally tested brick unit type;

3. The additional brick unit types possess equal or greater ratios of net cross-sectional area to gross cross-sectional area to the originally tested brick unit type as determined in accordance with ASTM C67; and

4. Recognition is limited to construction comprising an equal or greater number of wythes than in the originally tested brick construction type.

***Exception**:* It shall be permitted to obtain recognition for additional brick construction types that do not fulfill the above requirements provided that the following conditions are met:

a. Perform tests with anchor elements in the additional brick construction type in accordance with Table 4.7. The anchor element diameters tested in the additional brick construction type shall correspond to the diameters tested in accordance with Table 4.4 in the original brick construction type and recognition shall be limited to the tested anchor diameters.

b. Brick units are composed of the same material (e.g., clay/shale/similar).

c. Except as determined in accordance with Table 4.7, reduction factors determined for the original brick construction type as applicable in Eqs. (8-29) through (8-34) shall be applied to the bond strength and shear strength for additional brick element types.

d. Adjust the characteristic tensile bond strength and characteristic shear strength in uncracked and cracked masonry with the ratio of the mean bond strength for the tested anchor element diameters in the additional brick construction type to the mean bond strength for equivalent anchor element diameters in the original brick construction type.

TABLE 4.7—REQUIRED SUPPLEMENTARY TESTS FOR EACH ADDITIONAL BRICK CONSTRUCTION TYPE

Test type	h_{ef}	**Diameters**	**Table 4.4** Test No.
Reference	all	all	1a
			1b[×]
			1c
			1d[×]
	max	1/2[+], L	1e[×♦]
		SML*	1f[♦]
Reliability	max	SML*	2a[♦]
		SML*	2b[♦]
		L	5[♦]
Service condition	min	SML*	8[#]
			9[#^]
			10[#]

[×] This test may be omitted if the net and gross cross-sectional area of the brick units are equal in all dimensions.

[+] Test the nominal 1/2 in. (12.7 mm) diameter or the smallest nominal diameter if it is larger than 1/2 in. (12.7 mm).

* Where recognition is sought for a maximum of 4 anchor diameters, only the smallest and largest diameters are required to be tested.

S = smallest anchor element diameter for which recognition is sought.

M = middle anchor element diameter for which recognition is sought.

L = largest anchor element diameter for which recognition is sought.

♦ This test may be omitted if additional embedments do not exceed those tested for the original brick construction type.

Where recognition for seismic design qualification is sought.

˄ Test the series with the lowest characteristic capacity from tests 9a, 9b, and 9c of the original qualification

4.8 Test and performance requirements:

4.8.1 Masonry for test members: Masonry wall test specimens shall be prepared in accordance with Chapter 21 of the IBC and these criteria. Masonry components that comprise specimens shall conform to the following as applicable.

4.8.1.1 ASTM C90: Hollow and Solid Load-bearing Concrete Masonry Units shall conform to the following:

4.8.1.1.1 All ASTM C90 units used for qualification shall be classified as lightweight with density testing conducted in accordance ASTM C140.

4.8.1.1.2 The difference between the greatest and least cell thickness (**Section 1.4.18**) within ASTM C90 units used for qualification shall not exceed 1 inch (25.4 mm). The cell thickness in the center of the cell shall equal the greatest cell thickness.

4.8.1.1.3 A minimum of three ASTM C140 compressive strength tests shall be conducted at or beyond 28 days from manufacture to establish normalization trends. If the age of the units cannot be determined, the compressive strength tests shall be conducted at or beyond 28

days from delivery of the units. It is permitted to conduct additional compressive strength tests to determine more accurate trends.

4.8.1.1.4 In addition to the compressive strength, the testing laboratory shall report the following information about the concrete masonry units:

4.8.1.2 ASTM C216, ASTM C62, or ASTM C652: Building Brick composed of clay, shale, or similar.

4.8.1.3 ASTM C55: Concrete Building Brick.

4.8.1.4 ASTM C129: Nonloadbearing Concrete Masonry Units.

4.8.1.5 Mortar shall be prepared in accordance with Section 2103 of the IBC or Section R607 of the IRC and ASTM C270. The testing laboratory shall report the mortar composition, type, proportions and compliance with the standard and the anchor shall only be qualified for the mortar tested (e.g., Type N) and mortars with higher compressive strength. Compression tests of mortar are not required.

4.8.1.6 Grout shall be prepared in accordance with Section 2103 of the IBC and Section R609 of the IRC and ASTM C476. The testing laboratory shall report grout composition, type, proportions and compressive strength. It is required to develop a strength-age relationship based on compression tests conducted in accordance with ASTM C1019 at intervals based on Table 4.8 to establish grout strength for normalization purposes during

the test period with a minimum of three compressive specimen replicates at every age tested.

4.8.1.7 Test members should be at least 21 days old at the time of anchor installation and testing, as grout younger than this age is considered nonstandard. For tests in test members where grout is between 90 days and 18 months old, anchors must be tested within 30 days of grout strength testing.

TABLE 4.8— MAXIMUM TIMES BETWEEN COMPRESSIVE STRENGTH TESTS OF GROUT

Grout age	Maximum time between grout compressive strength tests	Comments
Less than 21 days	3 days	Only required for testing < 21 days.
21 - 35 days	7 days	—
36 - 56 days	14 days	—
57 - 90 days	30 days	—
90 days – 18 months	60 days	See Section 4.8.3.7

4.8.2 Requirements for test members:

4.8.2.1 Test members shall be fabricated using established construction procedures. Bed joints and head joints shall have a nominal thickness of 3/8 inch (9.5 mm); head joints shall be buttered with no more than two vertical lines of mortar at both wall faces with the minimum material needed to achieve the nominal joint thickness. It shall be permitted to remove excess mortar from the inside of the wall prior to grouting.

4.8.2.2 Normalization for test member strength is addressed in Section 8.3. Minimum masonry unit and grout strengths are

determined based on requirements in IBC Section 2105 or as specified for the testing program if greater than IBC minimum requirements.

4.8.2.3 Reliability tests shall be conducted in the same masonry batch (i.e., the same grout, mortar, and unit batches) as the reference tests to which they are compared. Figure 4.1 for batch control requirements.

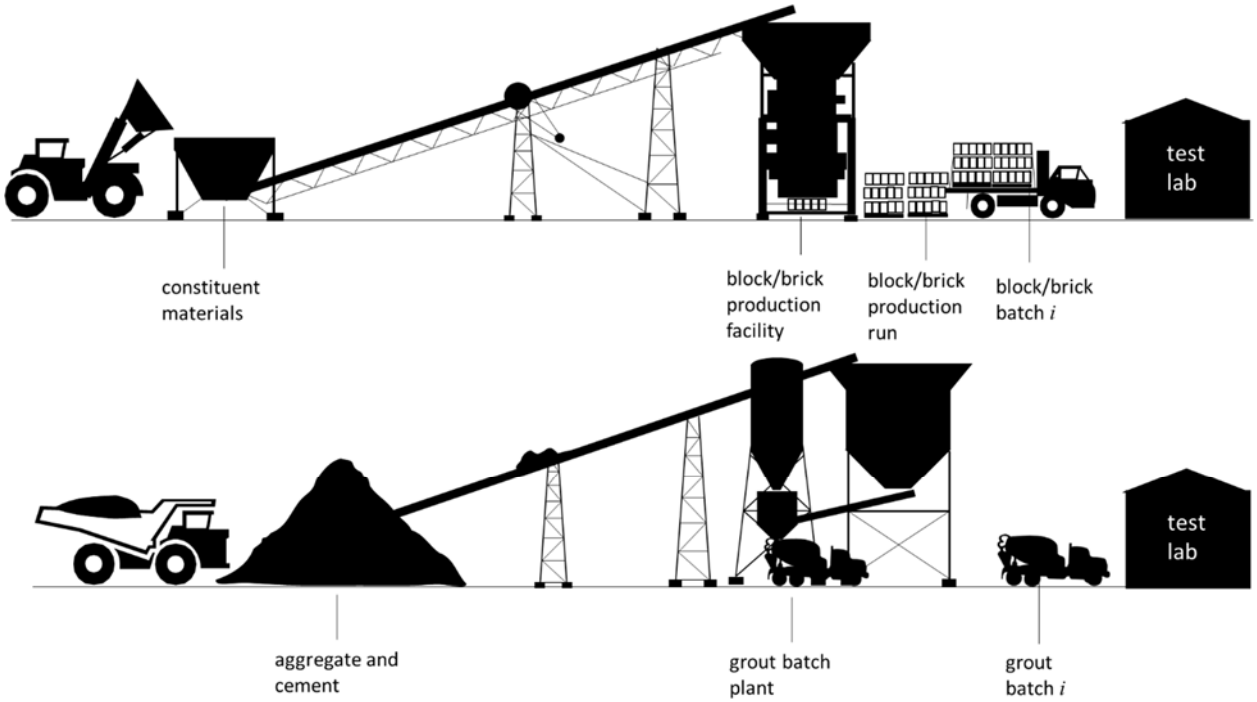

FIGURE 4.1—CONCEPT OF MASONRY BATCHES

4.8.2.4 Determine constituent test member strengths in accordance with Section 4.8.3. Develop strength-age relationships in accordance with Section 8.2.

4.8.2.5 Requirements for grouted CMU test members:

4.8.2.5.1 Dimensional requirements—Test members shall not exceed 8 courses high or 5 units wide as illustrated in Figure 4.3.

4.8.2.5.2 Uncracked grouted CMU test members—For handling and preservation of specimens, uncracked grouted CMU test members may employ the reinforcement scheme described in Section 4.8.2.5.3.

4.8.2.5.3 Cracked grouted CMU test members—Cracked masonry test members shall be designed to produce cracks of nearly constant width throughout the thickness of the component. Cracks should be spaced in a manner that precludes influence on individual anchors placed in a crack from adjacent cracks. Place internal reinforcement to control crack width such that there is no influence on anchor performance.

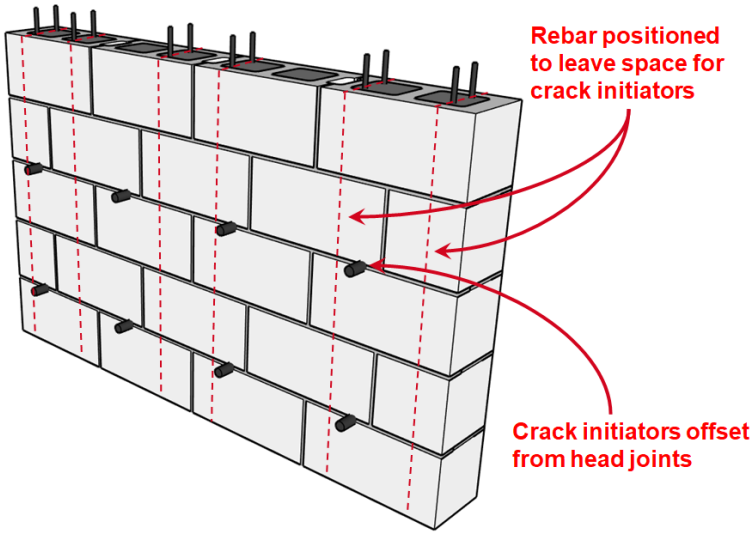

FIGURE 4.2—EXAMPLE OF REINFORCED WALL SPECIMEN FOR CRACKED MASONRY TESTING

4.8.2.5.3.1 Control crack width using embedded reinforcing bars oriented perpendicular to the intended crack plane and distributed across the test member cross-section at on-center spacing between 8 and 16 inches (203 and 406 mm). The proportion of tensile reinforcement to the gross cross-sectional area of the wall specimen in the crack plane shall be between 0.25 and 0.5 percent.

4.8.2.5.3.2 The centerline-to-centerline distance between any crack-control reinforcement and the anchor shall not be less than $0.4h_{ef}$.

4.8.2.5.3.3 The following methodology shall be followed for crack initiation and opening in grouted CMU :

- In a test member that has cured for at least 21 days, drill 1 ± 1/8 in. (25.4 ± 3.2 mm) diameter deep pilot holes into the mid-thickness of mortar joints and through the depth of the test specimen. Space pilot holes at approximately one pilot hole per 16 inches (406 mm) within each bed joint where cracking is desired.
- Initiate cracks by inserting expanding semi-cylindrical steel sleeves into the pilot holes and driving steel spikes through the sleeves. After crack initiation, remove the spikes and install the anchor to be tested with the crack bisecting the anchor, resulting in the length axis of the anchor is coincident with the crack plane.

- Replace and continue driving the spikes into the expanding sleeve until the specified crack width for the relevant test series is reached. Before applying load to the anchor, the average crack width, as measured by two crack measurement devices straddling the anchor, shall be equal to or greater than the specified crack width for the test series. Individual crack widths shall be between ± 15 percent of the specified crack width.

4.8.2.6 Requirements for ungrouted CMU test members—Test members shall not exceed 8 courses high or 5 units wide as illustrated in Figure 4.4. Testing in individual units (for tests in the center of the cell and in the web) and double units, as illustrated in Figure 4.5, is permitted.

4.8.2.7 Requirements for brick masonry test members—Test members shall not be less than 3 units wide and shall not exceed 6 feet (1829 mm) in width or height as illustrated in Figure 4.6.

4.8.3 Anchor Installation:

4.8.3.1 General requirements:

4.8.3.1.1 Anchor installation shall be in accordance with the MPII, except as otherwise required in these test criteria.

4.8.3.1.2 Pertinent data such as anchor embedment, depth, etc., shall be reported by the testing laboratory. Holes for anchor test specimens shall be drilled and cleaned in accordance with the MPII including diameter and depth. Only tools typically used in field installations are permitted. Brand, model number and size of power tool and drill bit type shall be reported. Compliance with applicable standards shall be reported when

appropriate. Drilling mode (e.g. rotation only or hammering with rotation) shall be reported for each base material. All procedures shall be conducted or directly verified by the testing laboratory and any deviations shall be reported.

4.8.3.1.3 All test anchors shall be installed perpendicular to the surface of the test member with a ± 6-degree tolerance in a manner representative of actual field installations.

4.8.3.1.4 Components of the anchor on which the reliability and capacity depend shall not be exchanged. Bolts, nuts, and washers not supplied with the anchors shall conform to the specifications given by the manufacturer and these specifications shall be included in the test report.

4.8.3.1.5 All anchors tested in ungrouted CMU and brick test members shall be installed and fully cured horizontally.

4.8.3.1.6 Test members may be compressed during handling but shall not be compressed during performance of anchor tests.

4.8.3.2 For anchors to be tested in tension in cracked CMU, deviation of the crack position from the anchor centerline should be limited to the surface of the member. For anchors to be tested in shear, it is more important that the anchor transect the crack position at the CMU surface. These conditions should be confirmed using a borescope.

4.8.3.2.1 With the test member unloaded, drill the hole for the anchor centered around a hairline crack that is sufficiently planar to ensure that the crack will approximately bisect the anchor location over the embedment depth of the anchor.

4.8.3.2.2 Visually verify positioning of the anchor in the crack before installation by using a borescope or similar device.

4.8.3.2.3 The preparation, mixing, placement, and curing of adhesives shall be observed and noted by the testing laboratory and/or inspection agency. Unless otherwise specified, adhesive materials shall be installed and cured at standard temperature for the minimum curing time specified in the MPII.

4.8.3.2.4 Where the MPII and the evaluation report specify maximum tightening torque values for anchor installation, torque values shall be determined with tests conducted in accordance with Section 6.11. If a maximum tightening torque is not specified, a quarter-turn past hand tightening shall be specified in the evaluation report.

4.8.4 Drill bit requirements:

4.8.4.1 Holes drilled with a rotary-percussive hammer drill shall be made using carbide-tipped, rotary-hammer bits meeting the requirements of ANSI B212.15.

4.8.4.2 For drill bits not covered by ANSI B212.15 (e.g., core bits), the ITEA shall measure and report the cutting diameter of the bits.

4.8.5 Test methods:

4.8.5.1 Test anchors in conformance with ASTM E488 and these criteria. Where differences occur, this criteria shall take precedence over ASTM E488.

4.8.5.2 Recorded displacements shall be corrected so that they represent the displacement of the anchor at the masonry surface.

4.8.5.3 In all tension tests, steel failure shall be avoided. To avoid steel failure, confined tension tests may be performed with an anchor element possessing a documented strength exceeding the product specification provided that the substituting material 1) possesses identical geometry and coatings to the specified product; or 2) can be demonstrated by testing not to affect the function or performance of the anchor system.

4.8.6 The minimum embedment depth at which reliability tests are conducted shall be that at which bond failure occurs to provide the proper level of bond stress for the assessment.

4.8.7 Confined testing requirements: Figure 4.3 shows the components comprising a confined tension test setup for adhesive anchors, whereby the reaction force is transferred into the masonry in proximity to the anchor element. The hole in the confining plate shall be $1.5d_o$ to $2.0d_o$ and shall be centered in the confining plate. The thickness of the confining plate shall be greater than or equal to d. The distance from the hole to the edge of the confining plate shall not be less than 2 inches (51 mm). The confining plate shall possess a smooth surface. A sheet of tetrafluoroethylene (TFE), polytetrafluoroethylene (PTFE), fluorinated ethylene propylene (FEP), or perfluoroalkoxy (PFA) of 0.5 ± 0.1 mm (0.020 ± 0.004 in.) corresponding to the area of the confining plate shall be placed between the confining plate and the masonry surface.

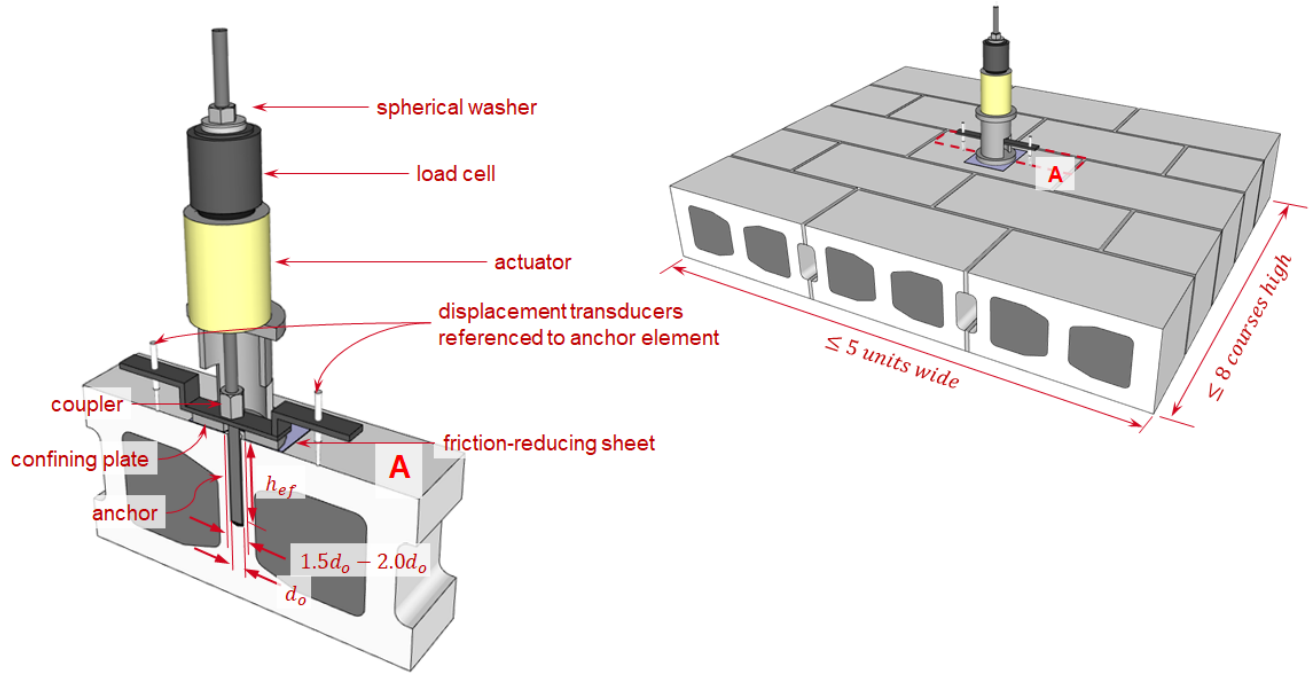

FIGURE 4.3— EXAMPLE OF CONFINED TENSION TEST SETUP FOR ADHESIVE ANCHORS (WEB LOCATION SHOWN)

4.8.8 Unconfined testing requirements:

4.8.8.1 General requirements: Figure 4.4 shows the components comprising an unconfined test setup for adhesive anchors, whereby the reaction force is transferred into the masonry away from the anchor element.

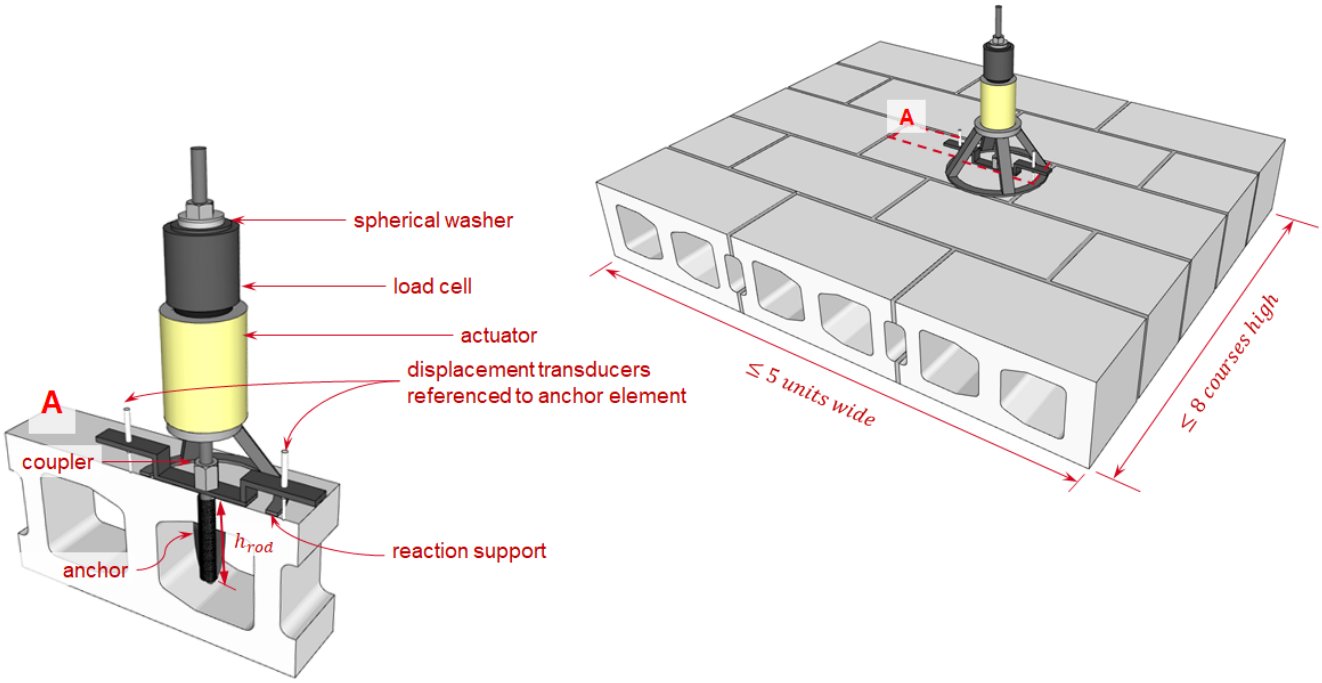

FIGURE 4.4— EXAMPLE OF UNCONFINED TENSION TEST SETUP FOR ADHESIVE ANCHORS (CENTER-OF-CELL LOCATION SHOWN)

4.8.8.2 Ungrouted CMU requirements:

4.8.8.2.1 For tests in the center of the cell and the bed joint, the distance between supports shall be at least large enough to span the length of the cell (i.e., in the long direction of the unit).

4.8.8.2.2 For tests in the center of the web, the distance from the anchor to the supports shall be a minimum of $2h_{rod}$.

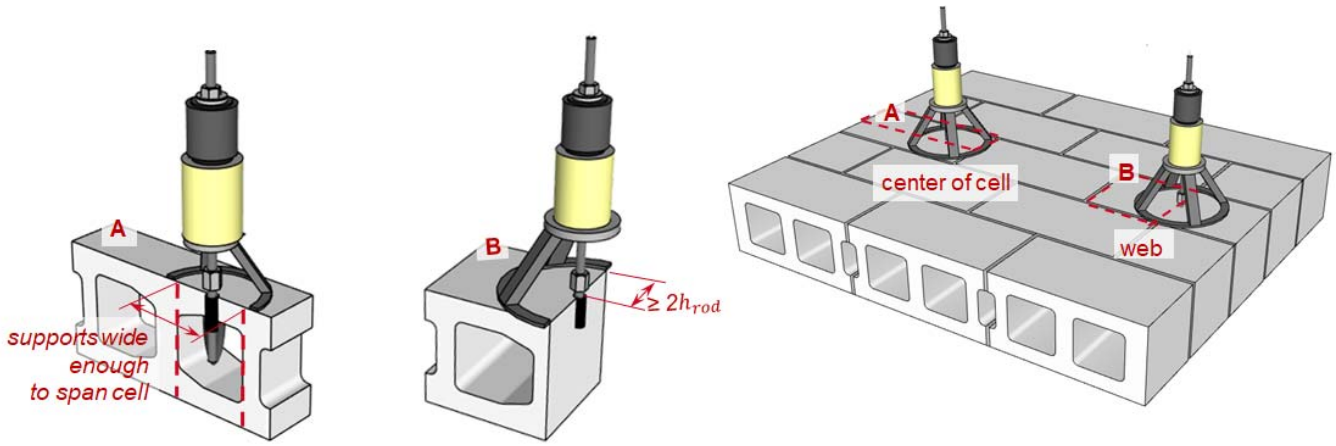

FIGURE 4.5— MINIMUM SUPPORT SPAN IN THE CENTER OF CELL AND BED JOINT (A) AND WEB (B) OF UNGROUTED CMU

4.8.8.3 Brick requirements: The distance from the anchor to the supports shall be no less than $2\,h_{rod}$.

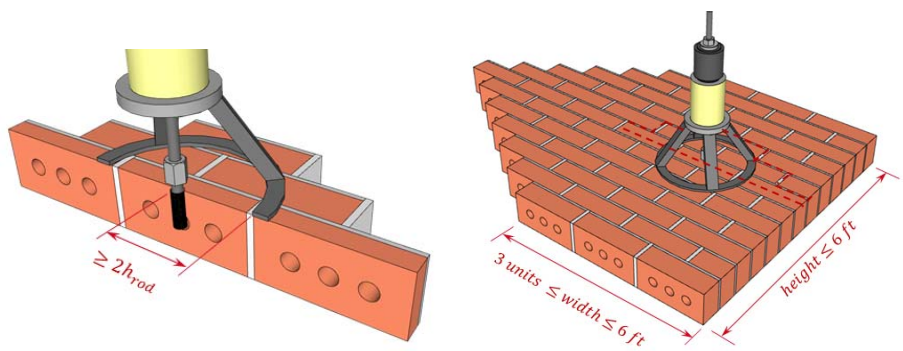

FIGURE 4.6— MINIMUM DIMENSIONS OF TEST MEMBER (LEFT) AND SUPPORT SPAN LENGTH FOR ADHESIVE ANCHORS IN BRICK

4.9 Tests in cracked masonry:

4.9.1 Perform tests in masonry test members meeting the requirements of Section 4.8.3. Initiate cracking in the test member. Install the anchor in accordance with Section 4.8.5 so that the axis of the anchor is

coincident with the crack plane. Install instrumentation for monitoring crack opening width. Monitor crack opening width using dial gauges or electronic transducers located roughly symmetrically on either side of the anchor on an axis oriented perpendicular to the crack plane to permit interpolation from the crack width measurement point to the anchor centerline as small as possible; this distance shall not exceed the greater of $1.0h_{ef}$ or 5 in. (127 mm). Increase the crack width by the specified crack value prior to applying external loads to the anchor. Verify by suitable means that the system used for crack formation and the associated test procedures produce cracks that remain parallel during test performance. The crack width, as measured at the opposite face of the test member in line with the anchor location, or as estimated based on the crack width measurement on each side of the test member as close to the opposite face as possible, should be approximately equal to the crack width measured on the anchor side. Verification that the test procedure used for a specific test will produce the appropriate crack geometry shall be performed at the beginning of the test series.

4.9.2 Subject the anchor to the specified loading sequence while monitoring the crack opening width at the surface as required in the specific test.

4.9.3 Record the applied load, corresponding anchor displacement, and crack width during the test as required in the specific test. Use a sampling frequency appropriate for the load or strain rate employed for the test.

4.10 Changes to products: Prior to modifying an anchor adhesive system previously assessed in accordance with AC58, the manufacturer shall

report the nature and significance of the change in the system to the ITEA serving as the primary laboratory for the original assessment and to ICC-ES. The ITEA shall determine which tests, if any, shall be performed to determine whether the change in the adhesive anchor system is equivalent to the previously assessed adhesive anchor system. For all changes that might affect the anchor performance, the ITEA shall perform sufficient reference and reliability tests to assess the impact of the change. Test results shall be shown statistically equivalent to those of the originally tested product. If the results of the reference and reliability tests cannot be shown to be statistically equivalent to the results of the original testing, retest and evaluate the modified adhesive anchor system in accordance with AC58.

5.0 REFERENCE TESTS

5.1 Purpose:

5.1.1 Reference tests shall be performed in each batch of masonry (Section 4.8.2.3) to obtain baseline values for reliability and service-condition tests where reference values are required to assess the effects of suboptimal hole cleaning, temperature variation, mixing effort, cracking, sustained load, type of loading, and environmental exposure on anchor performance.

5.1.2 Grouted CMU (Table 4.1, Tests 1a through 1d and Table 4.2, Tests 1a through 1e)—Perform all reference tension tests in the confined condition. (See Section 4.8.7.)

5.1.3 Ungrouted CMU (Table 4.3, tests 1a through 1e) and Brick (Table 4.4, tests 1a through 1e).

5.1.3.1 Perform reference tension tests in the unconfined condition (see Section 4.8.8) to establish the basic capacity of the anchors.

5.1.3.2 Perform confined reference tests against Reliability and Service-condition tests to which the reference tests are to be compared. (See Section 4.8.7).

5.2 Required Tests:

5.2.1 All tests: Conduct reference tests in the same masonry batch used for the reliability or service-condition tests to which they are compared. Reference tests may be used for comparison with more than one series of reliability or service-condition tests.

5.2.2 Grouted CMU: Required reference tests are summarized in Table 4.1 for anchors to be qualified for use in uncracked grouted CMU only and in Table 4.2 for anchors to be qualified for use in both uncracked and cracked grouted CMU. Tests shall be conducted in all locations illustrated in Figure 5.1.

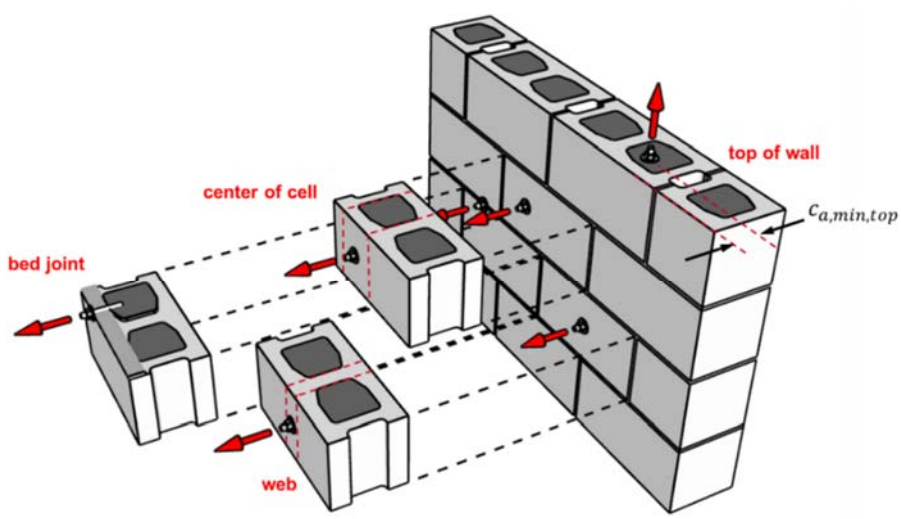

FIGURE 5.1—TESTING LOCATIONS IN TENSION FOR GROUTED CMU

5.2.3 Ungrouted CMU: Required reference tests are summarized in (Table 4.3) for anchors to be qualified for use in ungrouted CMU. Tests shall be conducted in all locations illustrated in Figure 5.2.

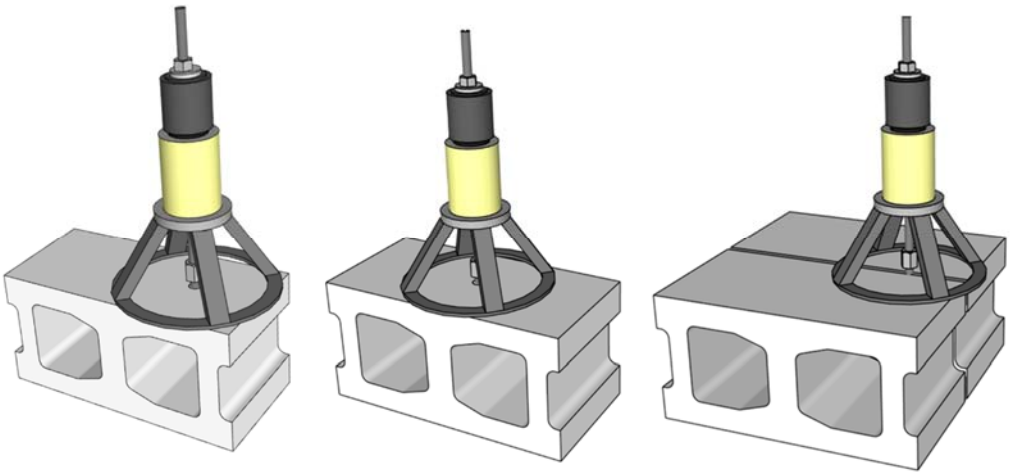

(a) *(b)* *(c)*

FIGURE 5.2— TESTING LOCATIONS: (A) IN THE CENTER OF CELL, (B) WEB, AND (C) BED JOINT OF UNGROUTED CMU

5.2.4 Brick: Required reference tests are summarized in Table 4.4 for anchors to be qualified for use in brick. Tests shall be conducted in all locations illustrated in Figure 5.3 and as described below:

- Hollow portion: installation in mid-height of brick centered within the largest void in the brick
- Solid portion: installation in the mid-height of the brick in the most centrally located solid portion
- Bed joint: Installation in bed joint, centered within the largest void of either of the adjacent brick units

- Head joint: Installation in mid-height of the head joint

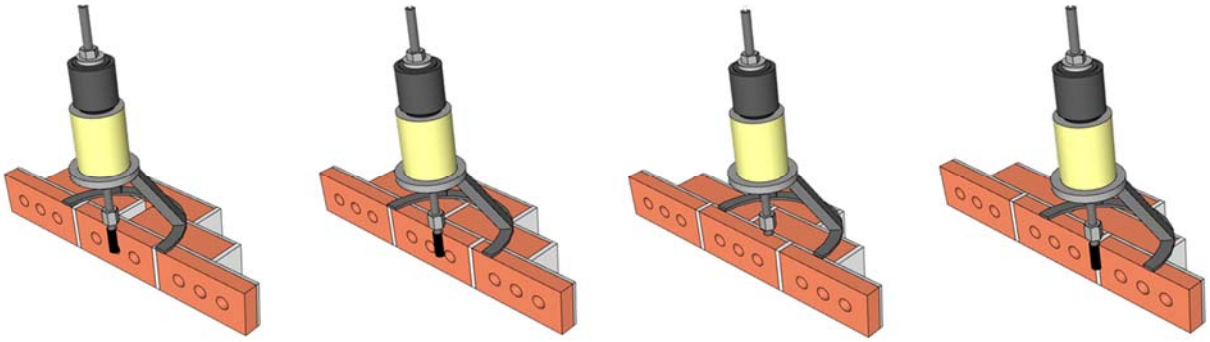

(a) *(b)* *(c)* *(d)*

FIGURE 5.3— TESTING LOCATIONS IN THE: (a) HOLLOW PORTION, (b) SOLID PORTION, (c) BED JOINT, AND (d) HEAD JOINT OF BRICK MASONRY CONSTRUCTION

5.3 Conduct of tests:

5.3.1 Prepare test members, install anchors and test in accordance with Section 4.8 or Section 4.9.

5.3.2 Perform tests in dry masonry.

5.3.3 Perform tests with masonry and anchor at standard temperature.

6.0 RELIABILITY TESTS

6.1 Purpose:

6.1.1 Reliability tests are performed to establish that the anchor is capable of safe, effective behavior under normal and adverse conditions, both during installation and in service.

6.1.2 Reference tests shall be performed as confined tension tests. Refer to Section 4.8.7.

6.2 Required tests:

6.2.1 Required reliability tests are given in Table 4.1 for adhesive anchors to be qualified for use in uncracked masonry only and in Table 4.2 for adhesive anchors to be qualified for use in both uncracked and cracked masonry.

6.2.2 Tests for the influence of drill tolerance on anchor behavior are not required.

6.3 Conduct of tests:

6.3.1 Prepare test members, install anchors, and test in accordance with Section 4.8 or Section 4.9 unless otherwise noted.

6.3.2 Test members for reliability shall be of the same masonry batch as the reference tests.

6.3.3 Perform tests in dry masonry unless otherwise noted.

6.3.4 Perform tests with masonry and anchor at standard temperature unless otherwise specified.

6.4 Reliability tests are intended to assess the sensitivity of the tested systems to variations in installation and service-condition parameters that are likely experienced in practice. They are not intended to address gross installation errors. Gross installation errors are characterized by significant deviations from the MPII or design specifications and include, but are not limited to:

- Deviations from the specified range of embedment depths;
- Use of a nominal diameter drill bit other than that specified;

- Incorrect assembly or operation of the adhesive mixing and dispensing equipment;
- Use of the product in base materials other than masonry;
- Use of the product in base materials having a temperature outside of the specified range for the product;
- Violation of specified gel and cure times; and
- Violation of storage and shelf life restrictions for the adhesive

6.5 Sensitivity to hole cleaning:

6.5.1 Dry masonry:

Refer to **Table 4.1**, Test 2a; **Table 4.2**, Test 2a; **Table 4.3**, Test 2a; and **Table 4.4**, Test 2a

6.5.1.1 Purpose: These reliability tests are used to assess the sensitivity of the anchor tensile capacity to reduced hole cleaning prior to anchor installation.

6.5.1.2 General test conditions: Perform confined tension tests in uncracked masonry at standard temperature using the smallest and largest diameters for which recognition is sought at maximum embedment depth.

6.5.1.3 The following test description presumes a method of hole cleaning that includes cleaning the hole wall with a brush and blowing out the hole with air. Other cleaning methods are permitted; however, the MPII for the product shall contain sufficient specificity to permit the determination of a numeric (50 percent) reduction of hole cleaning effort. For hole cleaning methods

involving brushing and blowing operations, such specificity shall include, at minimum:

1. Requirements for all equipment to be used in the hole cleaning process, including air/vacuum pressure, nozzle construction, and brush dimension and materials, as applicable.

2. Acceptable methods and minimum number and duration of operations required for removal of drilling debris from hole.

3. Acceptable methods and minimum number and duration of operations required for removal of dust or drilling flour from the hole wall.

4. The required sequence of operation.

An exception to determine the reduced hole cleaning effort, regardless of the number of hole cleaning operations specified in the MPII, the number of times the operation step is repeated in tests for reduced cleaning effort shall not exceed two. For the purposes of this section, an operation shall be an action that is repeated not more than three times in succession.

6.5.1.4 Drill the hole into the masonry to the maximum depth defined by the manufacturer. Clean the hole with 50 percent of the specified minimum number of operations in the specified sequence, rounding down to the next whole number of operations. For example, if a total of four brushing and four blowing operations are specified, clean the hole with only two brushing and two blowing operations. Install the anchor in accordance with the MPII.

6.5.1.4.1 If the MPII does not contain sufficient specificity with respect to hole cleaning as defined in Section 6.5.1.3 to permit the determination of a numeric reduction of hole cleaning effort per this section, or if the required equipment is not specified as defined in Section 6.5.1.3, install the anchor in accordance with the MPII without hole cleaning.

6.5.1.5 Load the anchor to failure with continuous measurement of load and displacement.

6.5.2 Saturated masonry:

Refer to Table 4.1, Test 2b; Table 4.2, Test 2b; Table 4.3, Test 2b; and Table 4.4, Test 2b

6.5.2.1 Purpose: These reliability tests are used to assess the sensitivity of the adhesive material to hole cleaning for applications in water-saturated masonry.

6.5.2.2 General test conditions—Perform confined tension tests in uncracked masonry at standard temperature using the smallest and largest diameters for which recognition is sought at maximum embedment depth.

6.5.2.3 Fully submerge the test specimen in water at standard temperature for a minimum of 7 days. Immediately after the submersion period and prior to installing the anchor, remove all freestanding water with a vacuum and drill the borehole with the specified drill bit diameter. Clean the hole in accordance with the reduced cleaning effort specified in Section 6.5.1.3 and Section 6.5.1.4. Install the anchor in accordance with the MPII.

6.5.2.4 Load the anchor to failure with continuous measurement of load and displacement.

6.5.3 Assessment of results:

6.5.3.1 Assign an anchor category to the tested anchor system in accordance with Table 6.1, depending on the installation conditions specified for the anchor and the results of the sensitivity to hole cleaning tests in Section 6.5.1 and Section 6.5.2. The minimum value of α and α_{adh} shall control for the determination of the anchor category.

TABLE 6.1— ANCHOR CATEGORIES FOR ADHESIVE ANCHORS

Threshold value of α_{req} for selected reliability test		
Dry Masonry	**Saturated Masonry**	**Mixing effort**
Section 6.5.1	Section 6.5.2	Section 6.6
0.95	0.90	0.95
0.80	0.75	0.80

6.5.3.2 Where the controlling value of α or α_{adh} is less than the value of α_{req} corresponding to Anchor Category 2 in Table 6.1, the anchor shall be assigned to Anchor Category 2 and an additional reduction factor α_{cat2} for the determination of $\tau_{k(cr,uncr)}$ in accordance with Eq. (8-17) shall be determined in accordance with Eq. (6-1). For all other cases, α_{cat2} shall be taken as 1.0.

$$\alpha_{cat2} = \min\left[\min\left(\frac{\alpha}{\alpha_{req,cat2}}\right); \min\left(\frac{\alpha_{adh}}{\alpha_{req,cat2}}\right)\right] \qquad (6\text{-}1)$$

where $\alpha_{req,cat2} = \alpha_{req}$ for Anchor Category 2 for corresponding reliability test in accordance with Table 6.1.

6.5.3.3 The anchor category shall be reported in Table 10.1.

6.6 Sensitivity to mixing effort:

Refer to Table 4.1 Test 2c; Table 4.2, Test 2c; Table 4.3, Test 2c; and Table 4.4, Test 2c.

6.6.1 Purpose: These reliability tests are used to assess the sensitivity of the adhesive material to mixing effort. These tests are required only for those anchor systems where the mixing of the adhesive material is substantially controlled by the installer. Such cases include systems that require components to be mixed until a color change is effected throughout the adhesive material, the adhesive materials to be mixed with recommended equipment for a specific duration, and adhesive materials to be mixed with a repetitive missing operation a specific number of times.

6.6.1.1 These tests are not required for capsule anchor systems, cartridge systems, or bulk systems that employ automatic metering and mixing through a manifold and disposable mixing nozzle.

6.6.2 General test conditions—Perform confined tension tests in uncracked masonry. Conduct tests to establish the required time for full mixing using the mixing equipment specified by the MPII. Reduced mixing effort shall be achieved by decreasing the required time for full mixing by 25 percent. Load the anchor to failure with continuous measurement of load and displacement.

6.6.3 Assessment of results—Refer to Section 6.5.3.

6.7 Sensitivity to freezing and thawing:

Refer to Table 4.1, Test 3; Table 4.2, Test 3; Table 4.3, Test 3; and Table 4.4, Test 3

6.7.1 Purpose: These reliability tests are performed to evaluate the performance of anchors under freeze/thaw conditions. For practical purposes, this test is conducted in grouted CMU, including for ungrouted CMU and brick masonry qualification.

6.7.2 General test conditions: Perform confined sustained tension tests in uncracked grouted CMU followed by confined residual tension tests to failure. The reference tests to set the sustained tensile load and the residual tension tests shall be performed with the same confinement setup as the freeze-thaw test specimens.

6.7.2.1 Test specimens shall be capable of performing the operations prescribed in Section 6.7.2. Two permissible examples are provided in Section 6.7.2.1.1 and Section 6.7.2.1.2:

6.7.2.1.1 *Option A:* 6 in. diameter cores are taken perpendicularly from the face shell and centered on the grouted cells as shown in Figure 6.1. Each core is placed in a commercially available 6 in. (152 mm) diameter by 12 in. (305 mm) high steel cylinder mold to confine the core during freeze/thaw cycles and residual capacity testing.

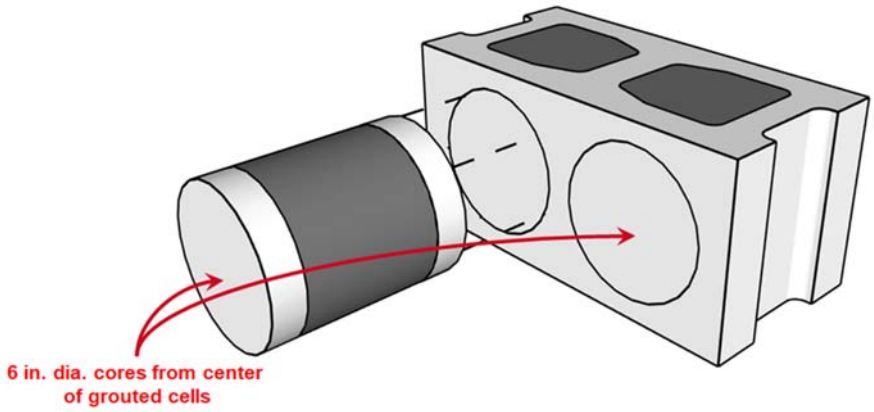

FIGURE 6.1—LOCATIONS OF CORES FOR OPTION A FREEZE-THAW SPECIMENS

6.7.2.1.2 *Option B:* Individual nominal 8 in. x 8 in. x 8 in. 203 mm x 203 mm x 203 mm) grouted concrete masonry units are centered within a commercially available 5-gallon (19 liter) bucket and encapsulated with Ultrical (or similar) capping compound.

6.7.2.2 Install and cure anchors at standard temperature in accordance with the MPII. In addition, perform a series of five confined tension tests installed and cured in accordance with the MPII at standard temperature in test members from the same masonry batch as the freeze-thaw specimens.

6.7.2.3 Cover the top surface of the test member within a minimum 3 in. (76 mm) radius from the center of the test anchor with potable water maintaining a minimum of 1/2 in. (12.7 mm) depth above the confinement plate bearing on the masonry surface throughout the test. Load the anchor with a constant tensile load $N_{sust,ft}$ given by Eq. (6-2) to be maintained throughout the test.

$$N_{sust,ft} = 0.55\overline{N}_{o,i}\left[\min\left(\frac{f_{g,test}}{f_{g,test,i}}, \frac{f_{b,test}}{f_{b,test,i}}\right)\right]^{0.5} \quad (6\text{-}2)$$

where

$\overline{N}_{o,i}$ = mean tensile capacity as determined from reference tests conducted in batch i in accordance with Section 6.7.2.2, whereby results that are less than 85 percent of the mean value shall be excluded from the determination of the mean (for example, the mean shall be recalculated with the remaining results, lb.);

$f_{g,test}$ = grout compressive strength as determined at the time of testing, psi (MPa);

$f_{g,test,i}$ = grout compressive strength corresponding to the tests used to establish $\overline{N}_{o,i}$, psi (MPa);

$f_{b,test}$ = unit compressive strength as determined at the time of testing, psi (MPa); and

$f_{b,test,i}$ = unit compressive strength corresponding to the tests used to establish $\overline{N}_{o,i}$, psi (MPa).

6.7.2.4 Conduct 50 cycles of freezing and thawing as follows:

1. Maintain load at $N_{sust,ft}$ throughout the freeze-thaw test.
2. Raise the temperature of the chamber within 1 hour to 68 ± 5 ˚F (20 ± 3 ˚C).

3. Maintain the chamber temperature at 68 ˚F ± 5 ˚F (20 ± 3 ˚C) for an additional 7 hours.

4. Lower the temperature to -4 ± 5 ˚F (-20 ± 3 ˚C) within 2 hours. Maintain the chamber temperature at -4 ± 5 ˚F (-20 ± 3 ˚C) for an additional 14 hours.

6.7.2.5 Measure the displacements during the temperature cycles.

6.7.2.6 If the test is interrupted, the samples shall always be stored at a temperature of -4 ± 5 ˚F (-20 ± 3 ˚C) between cycles.

6.7.2.7 After the completion of 50 cycles, conduct a confined tension test to failure at standard temperature.

6.7.3 Assessment of results:

6.7.3.1 The change in displacement as a function of time in freeze-thaw tests shall continually decrease with an increasing number of freezing and thawing cycles and shall approach zero.

6.7.3.2 If the requirement on displacement is not met, reduce the sustained load until the requirement is met and evaluate the reduction factor $\alpha_{\rho,ft}$ in accordance with Eq. (6-3).

$$\alpha_{\rho,ft} = \min\left[\frac{N_{red}}{N_{sust,ft}}\right] \leq 1.0 \qquad (6\text{-}3)$$

where:

N_{red} = reduced sustained load in a reliability test series as required to satisfy displacement requirement, lb. (kN); and

$N_{sust,ft}$ = required sustained load for tests in accordance with Eq. (6-2), lb. (kN).

6.7.3.3 The value of α_{req} for the residual tensile capacity shall be 0.90.

6.8 Sensitivity to crack width:

Refer to Table 4.2, Test 4.

6.8.1 Purpose: These reliability tests are used to assess the sensitivity of the anchor to a wide crack in the masonry passing through the anchor location.

6.8.2 *General test conditions:* Perform tension tests in cracked masonry in confined conditions. Initiate the crack in the test member and install the anchor at the crack location so that the axis of the anchor lies approximately in the plane of the crack. Visually confirm the correct location of the crack in the drilled hole prior to installing the anchor in accordance with Section 4.9. Open the crack by the specified value Δ_w. Perform a confined tension test to failure with continuous measurement of load, displacement, and crack width.

6.9 Sensitivity to sustained loading at standard and maximum long-term temperature:

Refer to Table 4.1, Test 4; Table 4.2, Test 5; Table 4.3, Test 4; and Table 4.4, Test 4

6.9.1 Purpose—These reliability tests are performed to evaluate the performance of anchors when designed for sustained loading at standard temperature and long-term temperature.

6.9.2 General test conditions:

6.9.2.1 Perform confined sustained tensile load tests in uncracked masonry, then perform confined tension tests to failure.

6.9.2.2 Install and cure anchors at standard temperature.

6.9.2.3 Conduct tests at standard and long-term test temperatures to the desired temperature categories in accordance with Table 7.1. If tests at the long-term test temperature are performed with N_{sust} in accordance with Eq. (6-4); unreduced by the factor α_{lt} and extrapolated to 50 years; and compared to the limiting displacement at loss of adhesion derived from tests at standard temperature, the tests at standard temperature are permitted to be omitted.

6.9.2.4 Temperature control shall be maintained via thermocouples in the masonry test member. Thermocouples shall be embedded through the face shell of masonry into the grouted portion to a depth equal to half the thickness of the test member with a ± 1/2 in. (12.7 mm) tolerance. The thermocouples shall be either cast into the masonry or positioned in holes drilled in the cured test member. Drilled holes for thermocouples shall have a maximum nominal diameter of 1/2 in. (12.7 mm) and shall be sealed in such a manner that the temperature readings reflect the masonry temperature.

As an exception to the provisions in the preceding paragraph, thermocouples are not required if it can be experimentally demonstrated that the test procedure will consistently produce test member temperatures in accordance with the target temperatures. The test procedure shall include monitoring of test chamber temperatures at maximum 1-hour intervals.

6.9.2.5 Each test shall be conducted for a minimum of 42 days .

6.9.3 Tests at standard temperature:

6.9.3.1 Within 24 hours after the curing period has elapsed, apply a tensile preload not exceeding 5 percent of $N_{sust,lt}$ or 300 lb. (1.33 kN), whichever is less, to the anchor prior to zeroing displacement readings then increase the load on the anchor to a constant tensile load $N_{sust,lt}$ as defined by Eq. (6-4). The load shall be applied using a confined test setup as depicted in Figure 4.3. After the load has been applied, adjust the temperature of the test member until the temperature, as recorded by the embedded thermocouples, is stabilized at the target temperature.

$$N_{sust,lt} = 0.55\overline{N}_{o,i}\left[\min\left(\frac{f_{g,test}}{f_{g,test,i}}, \frac{f_{b,test}}{f_{b,test,i}}\right)\right]^{0.5} \qquad (6\text{-}4)$$

where

$\overline{N}_{o,i}$ = mean tensile capacity as determined from reference tests in masonry as follows: Table 4.1 Test 1a; Table 4.2, Test 1a; Table 4.3, Test 1d; and Table 4.4, Test 1e, whereby results that are less than 85 percent of the mean value shall be excluded from the determination of the

mean (for example, the mean shall be recalculated with the remaining results, lb.);

$f_{g,test}$ = grout compressive strength as determined at the time of testing, psi (MPa);

$f_{g,test,i}$ = grout compressive strength corresponding to the tests used to establish $\overline{N}_{o,i}$, psi (MPa);

$f_{b,test}$ = unit compressive strength as determined at the time of testing, psi (MPa); and

$f_{b,test,i}$ = unit compressive strength corresponding to the tests used to establish $\overline{N}_{o,i}$, psi (MPa).

6.9.3.2 Maintain at the target temperature.

6.9.3.3 Record anchor displacement for the duration of the test. The frequency of monitoring displacements shall be chosen to demonstrate anchor characteristics. To capture the higher magnitude of displacement at the beginning of the sustained loading period, the frequency of displacement measurements should be high initially and reduced over time. The following monitoring schedule would be acceptable:

a) during the first hour—every ten minutes;
b) during the next six hours—every hour
c) during the next ten days—every day; and
d) thereafter—every five to ten days.

6.9.3.4 Temperatures in the test chamber are permitted to vary by ± 11 °F (± 6 °C) due to day/night and seasonal effects, but the required test chamber temperature shall be achieved as an average over the test period. Record the masonry test member temperature at maximum one-hour intervals. If thermocouples are not used in accordance with Section 6.9.2.4, record the temperature in the test chamber at maximum one-hour intervals.

6.9.3.5 If the masonry test member temperature falls below the minimum target temperature, including tolerances, for more than 24 hours, extend the test duration by the length of time the temperature was below the target minimum.

6.9.3.6 After the sustained loading portion of the test, conduct a confined tension test to failure at standard temperature with continuous measurement of load and displacement.

6.9.4 Tests at elevated temperature:

6.9.4.1 It is required to perform the tests in a masonry test member made from the same batch as the test member used for the tests at elevated short-term temperature.

6.9.4.2 Within 24 hours after the curing period has elapsed, the temperature of the test member shall be increased at a rate of approximately 35 °F (20 °C) per hour until the temperature, as determined from the thermocouples, is stabilized for at least 24 hours at the maximum long-term temperature. Apply a tensile preload not exceeding 5 percent of $N_{sust,lt}$ or 300 lb. (1.33 kN), whichever is less, to the anchor between 24 and 48 hours after the

curing period has elapsed prior to zeroing displacement readings then increase the load on the anchor to a constant tensile load as defined by Eq. (6-4) multiplied by α_{lt} as determined in accordance with Eq. (7-1).

6.9.4.3 The load shall be applied using a confined test setup as depicted in Figure 4.3.

6.9.4.4 Maintain $N_{sust,lt}$ at the maximum long-term test temperature. For the frequency of displacement monitoring, refer to Section 6.9.3.3. The temperature in the test chamber is permitted to vary within a tolerance of ± 5 °F (± 2 °C) due to day/night and seasonal effects, but the required test chamber temperature shall be achieved as an average over the test period.

6.9.4.5 After the sustained loading portion of the test, conduct a confined tension test to failure at the maximum long-term test temperature with continuous measurement of load and displacement.

6.9.5 Assessment of results:

6.9.5.1 The total displacement over the intended service life of the anchor, which includes the initial elastic displacement plus the creep displacement, is determined for each specimen by projecting a logarithmic trend line forward over the intended anchor service life. The trend line shall be determined by calculating a least-squares fit through the data points using the equation below and shall be constructed with data from not less than the last 20 days, with a minimum of 20 data points, of the sustained load test.

$$\Delta(t) = \Delta_{t=0} + a \cdot t^b \tag{6-5}$$

where

$\Delta(t)$ = total displacement recorded in the test at time *t,* in. (mm);

$\Delta_{t=0}$ = initial displacement recorded under sustained load, in. (mm);

t = the time corresponding to the total recorded displacement, hours; and

a, b = constants evaluated by regression analysis

6.9.5.2 Calculate the estimated displacement corresponding to the anchor intended service life for each test using the following equation:

$$\Delta_{service} = \Delta_{t=0} + a \cdot \left(t_{service}\right)^b \tag{6-6}$$

where

$\Delta_{service}$ = extrapolated estimate of the total displacement over the anchor intended service life, in. (mm);

$\Delta_{t=0}$ = initial displacement recorded under sustained load, in. (mm);

$t_{service}$ = the intended anchor service life, hours;

= 50 years (standard temperature conditions);

= 10 years (elevated temperature conditions); and

a , b = constants evaluated by regression analysis

6.9.5.3 The mean values of the extrapolated estimates of the total displacement over the intended service life, $\overline{\Delta}_{service}$, at standard

temperature and at the long-term elevated temperature shall not exceed $\overline{\Delta}_{\lim}$, where $\overline{\Delta}_{\lim}$ is the mean displacement corresponding to the loss of adhesion N_{adh} (Section 8.5.3.3, Figure 8.1) as measured in the corresponding reference tests at standard temperature or maximum long-term elevated temperature, respectively. It shall be permitted to omit the sustained load tests at standard temperature, however, if the displacements measured in the sustained load tests at long-term temperature are extrapolated to 50 years and the mean value $\overline{\Delta}_{service}$ does not exceed $\overline{\Delta}_{\lim}$.

6.9.5.4 The calculated estimated displacement $\Delta_{service}$ for any one test shall not exceed $1.2\overline{\Delta}_{\lim}$.

6.9.5.5 If the requirement on displacement is not met, reduce the sustained load until the requirement is met and evaluate the reduction factor $\alpha_{\rho,sust}$ in accordance with Eq. (6-7). The applied sustained load shall not be less than 40 percent of $N_{sust,lt}$ as determined in accordance with Eq. (6-4).

$$\alpha_{\rho,sust} = \min\left[\frac{N_{red}}{N_{sust,lt}}\right] \leq 1.0 \qquad (6\text{-}7)$$

where:

N_{red} = reduced sustained load in a reliability test series as required to satisfy displacement requirement, lb.; and

$N_{sust,lt}$ = required sustained load for tests in accordance with Eq. (6-4), lb.

6.9.5.6 The value of α_{req} for the residual tensile capacity shall be 0.90.

6.10 Sensitivity to installation direction:

Refer to Table 4.1, Test 5; Table 4.2, Test 6; Table 4.3, Test 5; and Table 4.4, Test 5.

6.10.1 Purpose: These reliability tests are performed to evaluate the performance of adhesive anchors installed horizontally.

6.10.1.1 *Exception*—If tests for sensitivity to installation direction have been conducted in accordance with AC308, the resulting reduction factors from the AC308 assessment may be applied to the current assessment in lieu of conducting the tests within Section 6.10.

6.10.2 General test conditions: Perform confined tension tests in uncracked masonry. Conduct tests on all-thread anchors that have been installed in accordance with the MPII with the largest diameter and embedment depth.

6.10.3 Anchors shall be installed horizontally. Install and cure anchors at the minimum and maximum installation temperatures for masonry and adhesive included in the MPII for downhole installation. Perform tension tests at standard temperature to failure with continuous measurement of load and displacement.

6.10.4 Assessment of results:

6.10.4.1 When installed in accordance with the MPII, the annular gap around the anchor element shall remain completely filled with adhesive and the anchor element shall not displace downward more than the lesser of $d_a/20$ and 0.1 in. (2.5 mm) during the curing time. Include the following criteria in the assessment:

1. The adequacy of the MPII for horizontal orientation.
2. The adequacy of measures, as required, to capture excess adhesive during installation of the anchor element, to protect the unbonded portion of the anchor element from adhesive, and to ensure that the annular gap around the anchor element is completely filled with adhesive over the bonded length.
3. The adequacy of installation procedures to prevent formation of gaps and/or trapped air in the adhesive along bonded length of the anchor.

6.10.4.2 The value of α_{req} for the residual tensile capacity shall be 0.90.

6.11 Torque test:

Refer to Table 4.1, Test 6 and Table 4.2, Test 7.

6.11.1 Purpose: These reliability tests are performed to evaluate the relationship relation between the applied torque moment and the tensile force.

6.11.2 General test conditions: Figure 6.2 shows the test setup. The fixture shall contain all elements shown. The double-sided abrasive paper shall have sufficient roughness to prevent rotation of the washer relative to the test fixture during the application of torque. Other methods of preventing rotation of

the washer shall be permitted, provided it can be shown they do not affect the anchor performance. Apply increasing torque and record the torque and corresponding induced tension in the anchor. The washer shall not turn during the application of torque.

6.11.3 Assessment of results:

6.11.3.1 The torque test shall achieve a torque resistance of at least $1.3T_{inst}$. The anchor shall not turn in the anchor hole prior to reaching a torque resistance of $1.3T_{inst}$. In addition, Eq. (6-8) shall be fulfilled. If this requirement is not met, reduce the installation torque T_{inst} as required to fulfill the requirement.

$$N_{95\%} \leq \min\left[F_y; 0.8N_{k,test}\right] \tag{6-8}$$

where:

$N_{95\%}$ = 95 percent fractile (90 percent confidence) of the induced tensile force corresponding to $1.3T_{inst}$, lb. (kN);

$N_{k,test}$ = characteristic tensile capacity evaluated from Table 4.1, Test 1a or Table 4.2, Test 1a; lb. (kN), and

F_y = $A_{se,N} f_{ya}$ for bolts with a defined yield stress, psi (MPa); or

= $0.8A_{se,N} f_{uta}$ for bolts without a well-defined yield stress, psi (MPa).

6.11.3.2 It shall be permitted to satisfy the requirement of Eq. (6-8) using a calculated value of $N_{95\%}$ in accordance with Eq. (6-9).

$$N_{95\%} = \frac{1.3T_{inst}}{k_f d_a} \tag{6-9}$$

Where k_f is the friction factor of threads. The friction factor shall be taken as a lower-bound value. For normal threaded rods without lubricants or friction-reducing coatings, $k_f = 0.2$ is assumed.

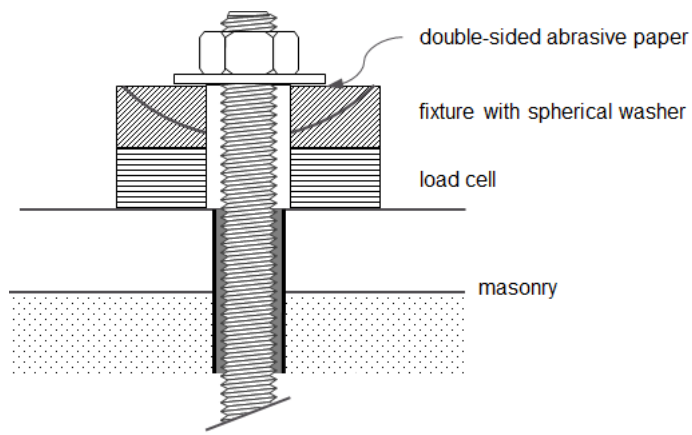

FIGURE 6.2—TORQUE TEST SETUP

7.0 SERVICE- CONDITION TESTS

7.1 Purpose: The purpose of the service-condition tests is to determine the basic data required to predict the performance of the anchor under service conditions.

7.2 Required tests: Required service-condition tests are given in Table 4.1 for adhesive anchors qualified for use in uncracked masonry only and in Table 4.2 for adhesive anchors qualified for use in both uncracked and cracked

masonry. Test requirements for adhesive anchors assessed to resist seismic loads are defined in Table 4.2, Table 4.3, and Table 4.4.

7.3 Conduct of tests:

7.3.1 Prepare test members, install anchors, and test in accordance with Section 4.8 unless otherwise noted.

7.3.2 Perform tests in dry masonry with air, masonry, and the anchor at standard temperature unless otherwise noted.

7.4 Tension tests at elevated temperature:

Refer to Table 4.1, Test 7a; Table 4.2, Test 8a; Table 4.3, Test 6a; and Table 4.4, Test 6a.

7.4.1 Purpose: These service-condition tests are used to assess the sensitivity of the adhesive material to applications in masonry with elevated temperatures that can occur over short periods of time (i.e., short-term test temperatures) as well as elevated temperatures that occur over more extended periods (i.e., long-term test temperatures).

7.4.1.1 Exception: If tension tests at elevated temperature have been conducted in accordance with AC308, the resulting reduction factors α_{lt} and α_{st} from the AC308 assessment may be applied to the current assessment in lieu of conducting the tests within Section 7.4**.**

7.4.2 General test conditions: Conduct static tension tests at long-term and short-term masonry temperatures corresponding to the desired

Temperature Category as defined by Table 7.1. It shall be permitted to obtain qualification at multiple temperature categories.

TABLE 7.1— REQUIRED TEMPERATURES FOR TESTING AT LONG- AND SHORT-TERM ELEVATED MASONRY TEMPERATURES

Temperature category	**Long-term temperature, T_{lt} ˚F**	**Short-term temperature, T_{st} ˚F**
A	110	176
B	≥ 110	≥ $T_{lt}+20$

All test temperatures have a minus tolerance of 0 degrees.
T (°C) = (T (°F) – 32) / 1.8

7.4.2.1 Conduct confined tension tests in uncracked masonry.

7.4.2.2 Maintain temperature control with thermocouples in accordance with Section 6.9.2.4 or Section 6.9.3.4.

7.4.2.3 Qualify anchors for one or both Temperature Categories given in Table 7.1. For Temperature Category A, perform tests at the short- and long-term test temperatures. For Temperature Category B, perform tests on anchors at standard temperature, at the long- and short-term test temperatures, and at a minimum of two intermediate temperatures between the long- and short-term temperatures with a maximum increment of 35 ˚F (20 ˚C). If the difference between the long-term test temperature and the selected short-term test temperature is less than 35 ˚F (20 ˚C), testing at intermediate temperatures is not required.

7.4.2.4 Install and cure all anchors at standard temperature. Following the recommended cure period, heat and maintain the test members at the desired temperature for a minimum of 24 hours. Remove each test member from the heating chamber and conduct a confined tension test to failure with continuous measurement of load and displacement before the temperature of the test member falls below the temperature listed in Table 7.1.

7.4.3 Assessment of results:

7.4.3.1 Calculate α_{lt} from the tension test results at the long-term test temperature using Eq. (7-1).

$$\alpha_{lt} = \min\left[\frac{\bar{N}_{lt}}{\bar{N}_o}; \frac{N_{k,lt}}{N_{k,o}}\right] \leq 1.0 \qquad (7\text{-}1)$$

7.4.3.2 Calculate α_{st} from the tension test results at the short-term test temperature using Eq. (7-2).

$$\alpha_{st} = \min\left[\frac{\bar{N}_{st}}{0.8\bar{N}_{lt}}; \frac{N_{k,st}}{0.8N_{k,lt}}\right] \leq 1.0 \qquad (7\text{-}2)$$

Comparison between the five-percent fractile values in Eq. (7-1) or (7-2) may be omitted if either of the following conditions is met:

- For both test series, the COV of the failure loads, v, does not exceed 10%.

- The difference in the number of tests in each series, Δ_n, does not exceed 5 and the COV of the temperature test series is equal to or less than the COV of the reference test series.

7.4.3.3 Refer to Section 8.5.3 for requirements on displacement.

7.4.3.4 For anchors that will not be designed for elevated masonry temperatures as defined by Table 7.1 and that do not resist sustained tensile loads, it shall be permitted to omit α_{ft} and α_{fs} from determination of the bond strength $\tau_{k(cr,uncr)}$ in accordance with Eq. (8-17).

7.5 Tension tests at decreased installation temperature:

Refer to Table 4.1, Test 7b; Table 4.2, Test 8b; Table 4.3, Test 6b; and Table 4.4, Test 6b.

7.5.1 Purpose: These service-condition tests are used to assess the sensitivity of adhesive material to installation in masonry with a temperature less than 50 ˚F (10 ˚C) at the time of anchor installation.

7.5.1.1 Exception: tension tests at decreased installation temperature have been conducted in accordance with AC308, the resulting reduction factors from the AC308 assessment may be applied to the current assessment in lieu of conducting the tests within Section 7.5.

7.5.2 General test conditions: Perform confined tension tests in uncracked masonry.

7.5.2.1 Test all adhesive anchor systems to be permitted for installation in masonry with temperatures below 50 ˚F (10 ˚C) in accordance with Section 7.5.2.1.1. Additional tests in accordance in accordance with Section 7.5.2.1.2 shall be performed for all systems to be permitted for use in applications where masonry temperatures vary within a 12-hour period from a low of 40 ˚F (5 ˚C) or less to a high of 80 ˚F (27 ˚C) or more.

7.5.2.1.1 For anchors to be permitted by the MPII for installation in masonry with temperatures below 50 ˚F (10 ˚C), perform the following test:

(a) Install and test a minimum of five anchors per the MPII. Prior to installation, condition the anchor rod and masonry test member to the lowest installation temperature recommended by the manufacturer and maintain that temperature for a minimum of 24 hours.

(b) Allow the installed anchors to cure at the stabilized temperature for the cure time in accordance with the MPII.

(c) Immediately after the curing period has elapsed, remove the test members from the cooling chamber and perform confined tension tests on the anchors to such that the test members remain at the conditioned temperature. A thermocouple inserted into the test member or other suitable methods must be used to confirm the temperature.

7.5.2.1.2 For anchors to be permitted by the MPII for installation in masonry with temperatures below 40 ˚F (5 ˚C), in addition to the test described in Section 7.5.2.1.1, perform the following test:

(a) Install and test a minimum of five anchors per the MPII. Prior to installation, condition the anchor rod and masonry test member to the lowest installation temperature recommended by the manufacturer and maintain that temperature for a minimum of 24 hours.

(b) Allow the installed anchors to cure at the stabilized temperature for the cure time in accordance with the MPII.

(c) Apply a sustained tensile load as given by Eq. (6-2).

(d) Raise the temperature of the test chamber at a constant rate to standard temperature over a period of 72 to 96 hours while monitoring the displacement response for each anchor. A thermocouple inserted into the test member or other suitable methods must be used to confirm the temperature of the test members during the test. Once the test member attains standard temperature and the displacements stabilize, conduct a confined tension test to failure with continuous measurement of load and displacement. If the displacements do not stabilize within 150 hours from the start of temperature rise, the test shall be discontinued.

7.5.2.2 For anchors to be permitted for installation in masonry that is subject to temperature variations within a 12-hour period from a low of 40 ˚F (5 ˚C) or less to a high of 80 ˚F (27 ˚C) or more, perform the following test:

(a) Perform sustained load tests at standard temperature in accordance with Section 6.9.3.

(b) Masonry test members shall have maximum dimensions of 30 in. by 18 in. by 12 in. (760 mm by 460 mm by 300 mm). Alternatively, a 12 in. (300 mm) high cylinder with a maximum 13 in. (330 mm) diameter may be used.

(c) Install and test a minimum of five anchors per the MPII. Prior to installation, condition the anchor rod and masonry test member to the lowest installation temperature recommended by the manufacturer and maintain that temperature for a minimum of 24 hours.

(d) Allow the installed anchors to cure at the stabilized temperature for the cure time in accordance with the MPII.

(e) Immediately after the curing period has elapsed, remove the test members from the cooling chamber and apply a tensile preload not exceeding 5% of $N_{sust,lt}$ as given by Eq. (6-4) or 300 lb. (1.32 kN) to the anchor prior to zeroing displacement readings. Increase the load on the anchor to a constant tensile load $N_{sust,lt}$, raise the temperature of the test chamber at a constant rate of 5K/hr to standard temperature and maintain $N_{sust,lt}$ over a minimum duration of 42 days while monitoring the displacement response for each anchor in accordance in accordance with Section 6.9.3.3. A thermocouple inserted into the test member shall be used to confirm the temperature at the time of testing.

(f) Immediately following the sustained load portion of the test, conduct confined tension tests to failure at standard temperature with continuous measurement of load and displacement.

7.5.3 Assessment of results:

7.5.3.1 For anchors recommended for installation in masonry temperatures below 50°F, the mean and the 5 percent fractile of the failure loads associated with the reduced temperature installation shall equal or exceed the mean and the 5 percent fractile of the corresponding reference tests. Alternatively, it shall be shown that the two data sets are statistically equivalent.

7.5.3.2 Omit comparison of the 5 percent fractile values if either of the following conditions is met:

- For both test series, the COV of the failure loads $v_{test,x} \leq 10$ percent; or
- The difference in the number of tests in the series to be compared is $\Delta_n \leq 5$ and the COV of the reliability test series is equal or less than the COV of the reference test series.

7.5.3.3 For anchors recommended for installation in masonry temperatures below 40°F, the conditions of Section 7.5.2.1.2 shall be fulfilled. In addition, the displacement of the anchor under sustained load immediately prior to tension testing to failure shall stabilize to the degree that an assessment can be made that failure is unlikely to occur.

7.5.3.4 Retest anchors that do not fulfill the requirements for a given target temperature at a temperature at which the requirements are fulfilled. Report the temperature at which the requirements are fulfilled as the minimum masonry temperature at the time of installation.

7.6 Establishment of curing time at standard temperature:

Refer to Table 4.1, Test 7c; Table 4.2, Test 8c; Table 4.3, Test 6c; and Table 4.4, Test 6c.

7.6.1 Purpose: These service-condition tests are used to establish the minimum curing time of the adhesive material for the anchor to achieve full tensile capacity.

7.6.1.1 Exception: If tension tests establishing curing time have been conducted in accordance with AC308, the resulting reduction factors from the AC308 assessment may be applied to the current assessment in lieu of conducting the tests within Section7.6.

7.6.2 General test conditions: Perform confined tension tests in uncracked masonry. Tests are conducted on anchors installed in accordance with the MPII at standard temperature. The anchors shall be cured for the minimum curing time. Tests are also conducted on anchors installed in the same way and allowed to cure for the time specified in the MPII plus an additional 24 hours.

7.6.3 Assessment of results: Assess the results of the tests for curing at standard temperature in accordance with Eq. (7-3).

$$\min\left[\frac{\bar{N}_{cure}}{\bar{N}_{cure+24h}};\frac{N_{k,cure}}{N_{k,cure+24h}}\right]\leq 0.9 \qquad (7\text{-}3)$$

where

$\bar{N}_{cure}$ = mean tensile capacity corresponding to the manufacturer's specified minimum cure time, lb. (kN);

$\bar{N}_{cure+24h}$ = mean tensile capacity corresponding to the manufacturer's specified minimum cure time plus 24 hours, lb. (kN);

$N_{k,cure}$ = characteristic tensile capacity corresponding to the manufacturer's specified minimum cure time, lb. (kN); and

$N_{k,cure+24h}$ = characteristic tensile capacity corresponding to the manufacturer's specified minimum cure time plus 24 hours, lb. (kN).

7.6.4 Omit comparison of the 5 percent fractile values if either of the following conditions is met:

- For both test series, the COV of the failure loads $v_{test,x}$ ≤ 10 percent; or
- The difference in the number of tests in the series to be compared is Δ_n ≤ 5 and the COV of the reliability test series is equal or less than the COV of the reference test series.

7.6.5 If the conditions of Eq. (7-3) are not fulfilled, increase the cure time and repeat the test until Eq. (7-3) is fulfilled.

7.7 Durability tests:

Refer to Table 4.1, Test 8a/8b; Table 4.2, Test 9a/9b; Table 4.3, Test 7a/7b; and Table 4.4, Test 7a/7b.

7.7.1 Purpose: These service-condition tests are used to assess the response of the adhesive material to attack by environmental aggressors. Verify the durability of the adhesive material with slice test to assess the sensitivity of the installed anchors to different environmental exposures. For

practical purposes, this test is conducted in grout material, including for ungrouted CMU and brick masonry qualification.

7.7.1.1 The test for exposure to alkalinity is required, while the test for sulfur dioxide is optional.

7.7.1.2 Exception—If the durability tests for alkalinity and/or sulfur dioxide exposure have been conducted in accordance with AC308, the resulting reduction factors from the AC308 assessment may be applied to the current assessment in lieu of conducting the tests within Section 7.7.

7.7.2 *General test conditions*—Conduct tests on 1/2 in. (12.7 mm) diameter all-thread anchors or the smallest nominal diameter if it is larger than 1/2 in. (12.7 mm). Embed anchors in cylindrical test members composed of the same grout material used in grouted CMU wall testing with a minimum diameter of 6 in. (152 mm). Cast the grout test members in steel or plastic having a thickness as required to prevent slice splitting during punch testing. All test members shall originate from the same grout batch. Install anchors along the central axis of the grout test members in accordance with the MPII. For tests in sulfur dioxide, fabricate the anchor element from austenitic stainless steel. After curing the adhesive, grout cylinders in which the anchors are installed shall be cut with a diamond saw into 1-3/16 in. ± 1/8 in. (30.2 mm ± 3.2 mm) thick slices so the resulting slices are undamaged. Slices shall be oriented perpendicular to the anchor axis and consist of the grout, adhesive material, and anchor element. Discard the top and bottom slices. Prepare a minimum of 10 slices for each

environmental exposure to be investigated and 10 reference slices subjected to standard climate conditions.

7.7.2.1 Storage of reference slices—Store the slices under normal climate conditions (i.e., standard temperature with a relative humidity of 50% ± 5%) for 2,000 hours.

7.7.2.2 Storage of slices under aggressive environmental exposure—Store 10 slices each under the following environmental exposures.

7.7.2.2.1 High alkalinity—Store slices under standard climate conditions in a container filled with an alkaline fluid (pH = 13.2). All slices shall be completely covered for 2,000 hours. Produce the alkaline fluid by mixing water with potassium hydroxide (KOH) powder or tablets until the pH value of 13.2 is reached. Maintain a mean alkalinity value of pH = 13.2 ± 0.2 during storage. If the measured alkalinity falls below 13.0, extend the test duration by the total length of time during which the pH value was less than 13.0. The length of time the pH value was less than 13.0 shall not be included in the calculation of the mean alkalinity value. Monitor the pH value daily.

7.7.2.2.2 Sulfur dioxide—Perform tests in accordance in accordance with EN ISO 6988 (Kesternich Test); the theoretical sulfur dioxide concentration, however, shall be 0.67% at the beginning of a cycle, corresponding to 2 decameters (dm^3) of SO_2 for a test chamber volume of 300 dm^3. Perform at least 80 cycles.

7.7.3 Punch tests – Specimens shall be tested within 4 hours following removal from storage (exposure) whereby the specimens shall not be

permitted to dry out prior to testing. This condition shall be considered fulfilled if the specimens are maintained at standard temperature.

Alternatively, within 15 minutes of removal from storage (exposure), double-wrap the individual specimens in minimum 0.5-mil plastic wrap (PVC or LDPE) and place them in sealable plastic bags or impermeable containers until time of testing. Test the specimens within 4 hours following removal from the plastic wrap such that the not be permitted to dry out during testing. This condition shall be considered fulfilled if the specimens are maintained at standard temperature. The time during which the specimens are permitted to be contained in the sealed condition shall be minimized and shall not exceed 14 days.

The thickness of the slices shall be measured and the slices shall be tested in an apparatus that permits the anchor element of the slice to be punched through while restraining the surrounding grout material. (See Figure 7.1).

The loading punch shall act centrally on the metal element. The peak load for each test shall be recorded. Discard results from slices that split during the punch test. Evaluate the bond stresses $\tau_{alk,j}$ and $\tau_{sulf,j}$ for each punch using Eqs. (7-4) and (7-5), respectively.

$$\tau_{alk,j} = \frac{N_{u,alk,j}}{\pi d_a h_{sl}} \tag{7-4}$$

$$\tau_{sulf,i} = \frac{N_{u,sulf,i}}{\pi d_a h_{sl}} \tag{7-5}$$

where

$N_{u,alk,j}, N_{u,sulf,j}$ = measured axial load from alkalinity and sulfur tests corresponding to failure of slice j, lb. (kN);

d_a = anchor diameter, in. (mm); and

h_{sl} = measured thickness of slice j, in. (mm)

7.7.4 *Assessment of results*: Calculate the reduction factor α_{dur} based on the lower bond stress observed in alkalinity and punch tests, as applicable, using Eq. (7-6).

$$\alpha_{dur} = \frac{\min\left(\overline{\tau}_{alk,i}, \overline{\tau}_{sulf,i}\right)}{0.95\overline{\tau}_{o,i}} \leq 1.0 \qquad (7\text{-}6)$$

where

$\overline{\tau}_{alk,i}, \overline{\tau}_{sulf,i}$ = mean bond stress corresponding to durability tests with test member or masonry batch i stored in different media calculated in accordance with Eq. (7-4), psi (MPa); and

$\overline{\tau}_{o,i}$ = mean reference bond stress corresponding to durability tests with test member i or masonry batch i; calculated in accordance with Eq. (7-4), psi (MPa).

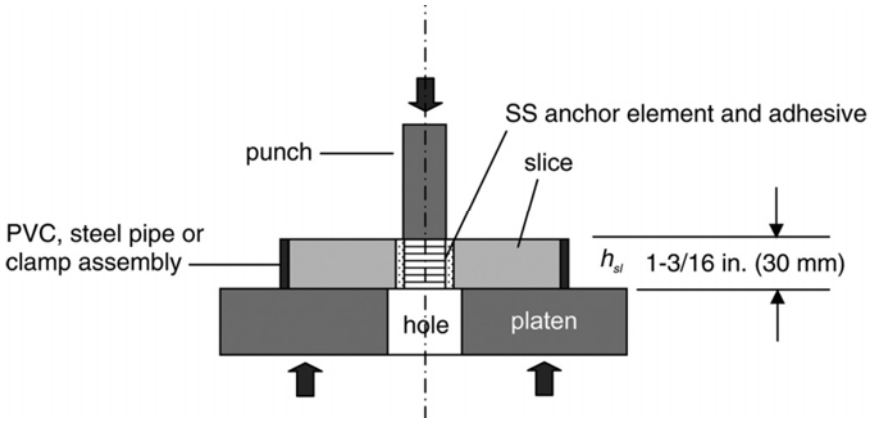

FIGURE 7.1—PUNCH TEST

7.8 Simulated seismic tension tests (optional):

Refer to Table 4.2, Test 10; Table 4.3, Test 8; Table 4.4, Test 8

7.8.1 Purpose: These optional tests are conducted to evaluate the performance of anchors in seismic tension, including the effects of cracks for grouted CMU, but without edge effects. The effects of cracking are not considered in ungrouted CMU. Qualification for seismic loading shall only be considered in the context of a cracked masonry test program in accordance with Table 4.2.

7.8.2 General test conditions for grouted CMU:

7.8.2.1 Test each anchor diameter at the embedment depths specified in Table 4.2.

7.8.2.2 Install the anchor in a closed crack in accordance with Section 4.9 in the bed joint. If no torque is specified by the MPII, finger-tighten the anchor prior to testing. Open the crack in grouted CMU by Δ_w = 0.020 in. (0.5 mm) where Δ_w is additive to the width of the closed hairline crack after anchor installation. Subject the anchors to the sinusoidal tensile loads

specified in Table 7.2 and Figure 7.2 with a cycling frequency between 0.1 and 2 Hz, whereby N_{eq} is given by Eq. (7-7), N_m is given by Eq. (7-9), and N_{int} is given by Eq. (7-8). The minimum load for each load level shall not exceed the larger of 5% N_{eq} or 100 lbs. (0.44 kN). Conduct load cycling in a confined test setup.

7.8.2.3 Following completion of the simulated seismic-tension cycles, open the crack to a width not less than the crack opening width as measured at the end of the cyclic test and load the anchor in tension to failure in a confined test setup. Record the residual tensile capacity, the corresponding displacement; and plot the load-displacement response.

7.8.3 General test conditions–ungrouted CMU and brick:

7.8.3.1 Test each anchor diameter at the embedment depths specified in Table 4.3 for ungrouted CMU and Table 4.4 for brick. Install the anchor in the bed joint. If no torque is specified by the MPII, finger-tighten the anchor prior to testing. Subject the anchors to the sinusoidal tensile loads specified in Table 7.2 and Figure 7.2 with a cycling frequency between 0.1 and 2 Hz, N_{eq} is given by Eq. (7-7), N_m is given by Eq. (7-9), and N_{int} is given by Eq. (7-8). The minimum load for each load level shall not exceed the larger of 5% N_{eq} or 100 lbs. (0.44 kN). Conduct load cycling in an unconfined test setup.

7.8.3.2 Following completion of the simulated seismic-tension cycles, load the anchor in tension to failure in an unconfined test setup.

Record the residual tensile capacity, the corresponding displacement; and plot the load-displacement response.

TABLE 7.2—REQUIRED LOADING HISTORY FOR SIMULATED SEISMIC TENSION TEST

Load level	N_{eq}	N_{int}	N_m
Number of cycles	10	30	100

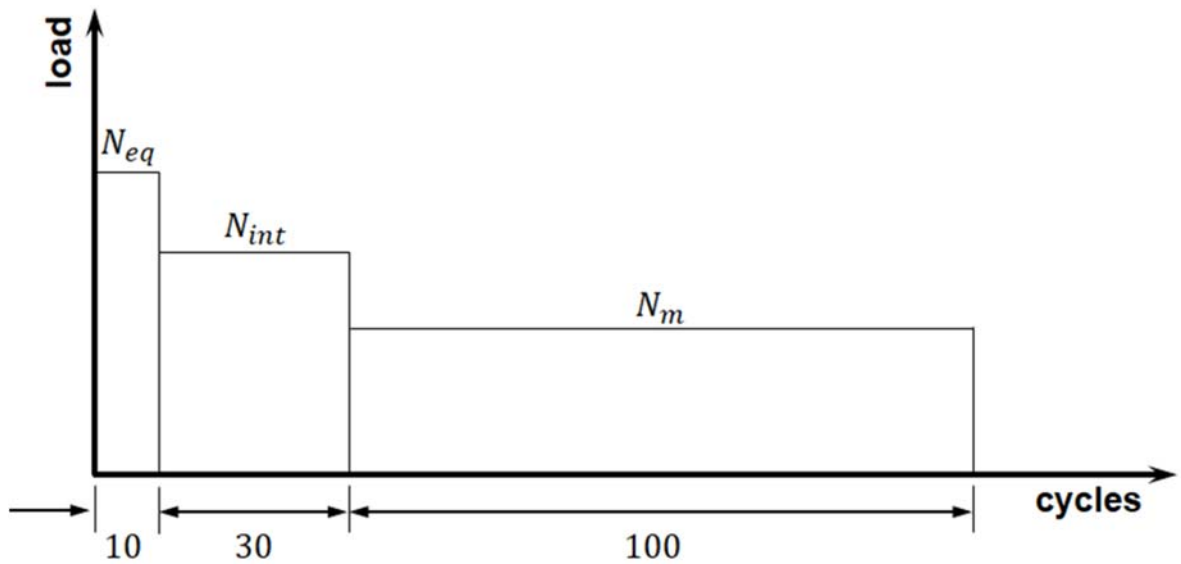

FIGURE 7.2—REQUIRED LOAD HISTORY FOR SIMULATED SEISMIC TENSION TEST

$$N_{eq} = 0.5\bar{N}_{o,i}\left[\left(\frac{h_g}{h_{ef}}\right)\left(\frac{f_{g,test}}{f_{g,test,i}}\right)^{0.5} + \left(\frac{h_g}{h_{ef}}\right)\left(\frac{f_{b,test}}{f_{b,test,i}}\right)^{0.5}\right] \quad (7\text{-}7)$$

$$N_m = \frac{N_{eq}}{2} \quad (7\text{-}8)$$

$$N_{int} = \frac{N_m + N_{eq}}{2} \quad (7\text{-}9)$$

where

$\bar{N}_{o,i}$ = mean tensile capacity from reference service-condition tests in in the bed joint (Table 4.2**,** Test 1e**;** Table 4.3, Test 1b; Table 4.4, Test 1c) lb. (N);

= *ungrouted CMU:* mean tensile capacity from Table 4.3 reference test 1b in in the bed joint, lb. (N);

= *brick:* mean tensile capacity from Table 4.4 reference test 1c in in the bed joint, lb. (N);

$f_{g,test}$ = compressive strength of grout at time of testing, psi;

$f_{g,test,i}$ = compressive strength of grout corresponding to the tests used to establish $\bar{N}_{o,i}$, psi (MPa);

$f_{b,test}$ = compressive strength of unit at time of testing, psi (MPa);

$f_{b,test,i}$ = compressive strength of unit corresponding to the tests used to establish $\bar{N}_{o,i}$, psi (MPa);

h_{ef} = effective embedment depth, in. (mm);

h_g = portion of embedment within grout, in. (mm); and

h_b = portion of embedment within the unit (including face shell, bed joint, and web), in. (mm).

7.8.4 Assessment of results in grouted CMU, ungrouted CMU, and brick:

7.8.4.1 All anchors in a test series shall complete the simulated seismic tension loading history specified in Table 7.2 and Figure 7.2. Failure of an anchor to develop the required tensile resistance in any cycle prior

to completion of the loading history specified in Table 7.2 and Figure 7.2 shall be recorded as an unsuccessful test. The mean residual capacity of the anchors in the test series shall be equal to or greater than 160 percent of N_{eq}, where N_{eq} is defined by Eq. (7-7).

7.8.4.2 Successful completion of the cyclic loading history and fulfillment of the residual tensile capacity requirement of this section shall be noted in Table 10.1.

7.8.4.3 If the anchor does not fulfill the aforementioned requirements at N_{eq}, it shall be permitted to conduct the test with reduced cyclic loads conforming to the loading history specified in Table 7.2 and Figure 7.2, whereby $N_{eq,reduced}$, $N_{\text{int},reduced}$, and $N_{m,reduced}$ are substituted for N_{eq}, N_{int}, and N_m, respectively. All anchors in a test series shall complete the simulated seismic tension loading history. Failure of an anchor to develop the required tensile resistance in any cycle prior to completion of the loading history given in Table 7.2 and Figure 7.2 shall be recorded as an unsuccessful test. The mean residual capacity of the anchors in the test series in the tension test shall be at least 160 percent of the reduced peak load $N_{eq,reduced}$. Report successful completion of the reduced cyclic loading history and fulfillment of the residual tensile capacity requirement together with the reduction factor $\alpha_{N,seis}$ as defined by Eq. (7-10).

$$\alpha_{N,seis} = \frac{N_{eq,reduced}}{N_{eq}} \tag{7-10}$$

7.8.4.4 The reduction factor $\alpha_{N,seis}$ shall be used to determine $\tau_{k,seis(cr,uncr)}$ in accordance with Eq. (8-20). Report these values in Table 10.1 for load combinations that include seismic loading.

7.9 Static shear testing for anchor elements with nonuniform cross-section, internally threaded inserts, and for qualification in brick masonry

Refer to Table 4.1, Test 9a, Table 4.2, Test 11a; Table 4.3, Text 9; and Table 4.4, Test 9.

7.9.1 Purpose: These tests are conducted to evaluate the baseline shear performance of anchors in uncracked masonry without edge effects in situations where the shear capacity cannot be reliably calculated. It shall be required to perform the shear tests described in this section where any of the following conditions apply:

- The cross-sectional area of the anchor shear plane is less than a threaded section of the same nominal diameter within five anchor diameters of the shear plane.
- The anchor system employs internally threaded inserts.
- Recognition for shear qualification in brick masonry in accordance with Table 4.4 is desired.

7.9.2 General test conditions:

7.9.2.1 Perform shear tests in uncracked masonry away from edges in accordance with ASTM E488.

7.9.2.2 Anchors with nonuniform cross-section: anchors at $h_{ef} = h_{ef,\min}$ and at $h_{ef} = 2h_{ef,\min}$ for anchor diameters that exhibit pullout failure in unconfined tests at $h_{ef} = h_{ef,\min}$, where $h_{ef,\min} \leq 8d_a$.

7.9.2.3 Internally threaded inserts: For internally threaded inserts having multiple inner thread diameters, perform tests with the largest inner thread diameter. In addition, conduct tests with all other inner diameters and threaded rod steel grades for which recognition is sought.

7.9.2.4 Testing location: Install anchor in the bed joint and load the anchor parallel to the bed joint.

7.9.3 Assessment of results: The characteristic shear capacity, V_s, shall be determined in accordance with Eq. (8-10) and normalized in accordance with Eq. (8-8), but shall not exceed the capacity determined in accordance with *ACI 318 Section 17.5.1.2 (Section D.6.1.2).*

7.10 Simulated seismic shear tests:

Refer to Table 4.2, Test 12; and Table 4.4, Test 10

7.10.1 Purpose: These optional tests are conducted to evaluate the performance of anchors in seismic shear loading, including the effects of cracks, but without edge effects. Qualification for seismic loading shall only be considered in the context of a cracked masonry test program in accordance with Table 4.2.

7.10.2 General test conditions for grouted CMU (all anchor element types)*:* Test each anchor diameter at the embedment depths specified in Table

4.2. Install the anchor in a closed crack in accordance with Section 4.9 within a bed joint. If no torque is specified by the MPII, finger-tighten the anchor prior to testing. Open the crack by Δ_w = 0.020 in. (0.5 mm), where Δ_w is additive to the width of the closed hairline crack after anchor installation. Subject the anchors to the sinusoidal shear loads specified in Table 7.3 and Figure 7.3 with a cycling frequency between 0.1 and 2 Hz with the shear load applied parallel to the direction of the crack, whereby V_{eq} is given by Eq. (7-11), V_m is given by Eq. (7-12), and V_i is given by Eq. (7-13). To reduce the potential for uncontrolled slip during load reversal, the alternating shear loading shall be permitted to be approximated by the application of two half-sinusoidal load cycles at the desired frequency connected by a reduced-speed ramped load as shown in Figure 7.4.

7.10.3 General test conditions for ungrouted CMU (only for nonuniform cross-sections and internally threaded inserts) and brick masonry (all anchor element types)*:* Test each anchor diameter at the embedment depths specified in Table 4.3 and Table 4.4, respectively. Install the anchor in bed joint. If no torque is specified by the MPII, finger-tighten the anchor prior to testing. Subject the anchors to the sinusoidal shear loads specified in Table 7.3 and Figure 7.3 with a cycling frequency between 0.1 and 2 Hz with the shear load applied parallel to the direction of the crack, whereby V_{eq} is given by Eq. (7-11), V_m is given by Eq. (7-12), and V_{int} is given by Eq. (7-13). To reduce the potential for uncontrolled slip during load reversal, the alternating shear loading shall be

permitted to be approximated by the application of two half-sinusoidal load cycles at the desired frequency connected by a reduced-speed ramped load as shown in Figure 7.4.

$$V_{eq} = 0.3 A_{se} f_{ut,test} \tag{7-11}$$

$$V_m = \frac{V_{eq}}{2} \tag{7-12}$$

$$V_{int} = \frac{V_m + V_{eq}}{2} \tag{7-13}$$

7.10.4 Record the crack width, anchor displacement, and applied shear load in accordance with Section 4.9. Plot the load-displacement history in the form of hysteresis loops.

7.10.5 Following completion of the simulated seismic shear cycles, open the crack to a width not less than the crack opening width as measured at the end of the cyclic shear test and load the anchor parallel to the crack in shear to failure. Record the maximum shear load or residual shear capacity and the corresponding displacement and plot the load-displacement response.

TABLE 7.3—REQUIRED LOADING HISTORY FOR SIMULATED SEISMIC SHEAR TEST

Load level	$\pm V_{eq}$	$\pm V_{int}$	$\pm V_m$
Number of cycles	10	30	100

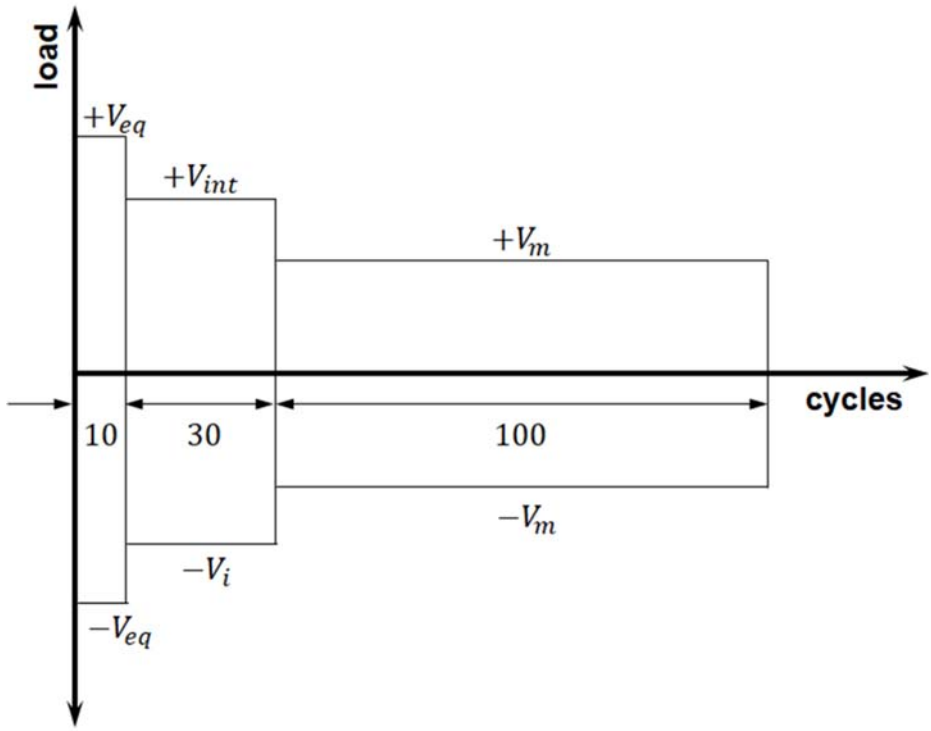

FIGURE 7.3—REQUIRED LOAD HISTORY FOR SIMULATED SEISMIC SHEAR TEST

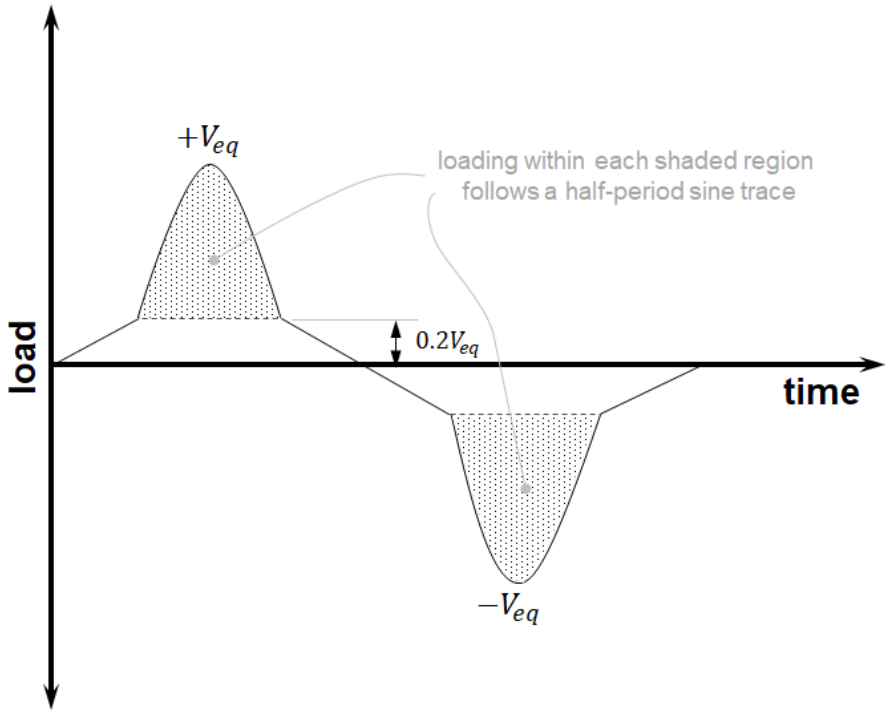

FIGURE 7.4—PERMITTED APPROXIMATION OF SEISMIC SHEAR CYCLE

7.10.6 Assessment of results:

7.10.6.1 All anchors in a test series shall complete the simulated seismic shear load history specified in Table 7.3 and Figure 7.3. Failure of an anchor to develop the required shear resistance in any cycle prior to completion of the loading history specified in Table 7.3 and Figure 7.3 shall be recorded as an unsuccessful test. The mean residual capacity of the anchors in the test series shall be equal to or greater than 160 percent of V_{eq}, where V_{eq} is defined by Eq. (7-11).

7.10.6.2 Successful completion of the cyclic loading history and fulfillment of the residual shear capacity requirement of this section shall be noted in Table 10.1.

7.10.6.3 If the anchor does not fulfill the aforementioned requirements at V_{eq}, it shall be permitted to conduct the test with reduced cyclic loads conforming to the loading history specified in Table 7.3 and Figure 7.3 whereby $V_{eq,reduced}$, $V_{\text{int},reduced}$, and $V_{m,reduced}$ are substituted for V_{eq}, V_{int}, and V_m, respectively. All anchors in a test series shall complete the simulated seismic shear loading history. Failure of an anchor to develop the required shear resistance in any cycle prior to completion of the loading history given in Table 7.3 and Figure 7.3 shall be recorded as an unsuccessful test. The mean residual capacity of the anchors in the test series in the shear test shall be at least 160 percent of the reduced peak load $V_{eq,reduced}$. Report successful completion of the

reduced cyclic loading history and fulfillment of the residual shear capacity requirement together with the reduction factor $\alpha_{V,seis}$ as defined by Eq. (7-14).

$$\alpha_{V,seis} = \frac{V_{eq,reduced}}{V_{eq}} \tag{7-14}$$

where

$\alpha_{V,seis}$ = reduction factor for seismic loading specific to each material type.

7.10.6.4 For anchor diameters not tested in shear, the minimum values of $\alpha_{V,seis}$ determined for the tested anchor diameters closest to the untested diameters shall be used in Eq. (8-34).

7.10.6.5 Report shear capacities obtained in Table 10.1.

7.10.6.6 For a given anchor diameter, all embedment depths greater than the tested embedment depth shall be qualified at the value of V_s determined in accordance with Section 8.7. Use linear interpolation for the evaluation of V_s for embedment depths between those tested.

7.11 Optional top-of-wall and end-of-wall testing

Refer to Table 4.1, Tests 1d and 9b; and Table 4.2, Test 1d and 11b

7.11.1 Purpose: Where top-of-wall qualification is desired, at minimum, static tension (Section 7.11.2) and static shear (Section 7.11.3) tests shall be performed at the minimum top-of-wall edge distance to be qualified. These tests establish tensile bond stress and in-plane shear capacities for the top of the wall that are permitted to be applied at and beyond the minimum edge distance. Further testing is permitted to be performed to refine reportable values

at larger edge distances or end-of-wall installations as desired following the provisions within Section 7.11.

7.11.2 Static tension tests at minimum top-of-wall edge distance:

7.11.2.1 Test conditions: Tests shall be performed in the center of the cell at the minimum top-of-wall edge distance sought for recognition.

7.11.2.2 Assessment of results—Determine the characteristic strength and bond stress in accordance with Eq. (8-10). Calculate the reported bond stress in accordance with Section 8.5.4.3.5.

7.11.3 Static shear testing at minimum top-of-wall edge distance:

7.11.3.1 *Test conditions*—Tests shall be performed in the center of the cell at the minimum edge distance sought for recognition at the top of the wall with in-plane loading. Load shall be applied toward the nearest head joint.

7.11.3.2 Assessment of results: The characteristic capacity for out-of-plane (i.e., parallel to edge) loading, $V_{top,par}$, shall be determined in accordance with Eq. (8-10) and normalized in accordance with Eq. (8-8).

8.0 GENERAL ASSESSMENT OF ANCHORS

8.1 Analysis of Data:

8.1.1 Analyze data accordance with the procedures defined within individual tests and this section. Report the results in accordance with the requirements of Section 10.0.

8.2 Establishment of masonry strengths and trends:

8.2.1 Grout strength: Establish grout strength trends in accordance with Eq. (8-1).

$$f_{g,i(t)} = f_{g,i(28)}\left(\frac{t}{4+0.85t}\right) \tag{8-1}$$

where

$f_{g,i(t)}$ = compressive strength of grout batch i at age t (days), psi (MPa); and

$f_{g,i(28)}$ = best-fit (i.e., calculated, not tested) 28-day grout compressive strength using least-squares regression of ASTM C1019 test data tested at frequencies in accordance with Table 4.8, psi (MPa).

8.2.2 Unit strength:

8.2.2.1 It shall be permitted to assume that the concrete and clay/shale/similar brick compressive strength based on testing in accordance with ASTM C140 and ASTM C67, respectively, remain constant throughout the test program, i.e.:

$$f_{b,i} = f_{b,i(28+)} \tag{8-2}$$

where

$f_{b,i}$ = compressive strength of unit batch i to be used at all ages, psi (MPa); and

$f_{b,i(28+)}$ = unit compressive strength resulting from ASTM C140 / ASTM C67 testing at or beyond 28 days from production date, psi (MPa).

8.2.2.2 If desired, unit strength trends are to be established following the methodology prescribed in Section 8.2.1 in lieu of the simplifying assumption of constant unit strength in Section 8.2.2.1.

8.2.3 Grouted CMU compressive strength: For use in shear test normalization for nonuniform cross-sections, establish masonry strength trends in accordance with Eq. (8-3).

$$f_{m,i(t)} = 0.59a \cdot f_{b,i} + 0.90(1-a) \cdot f_{g,i(t)} \tag{8-3}$$

where

$f_{m,i(t)}$ = compressive strength of masonry batch i at age t (days), psi (MPa);

a = ratio of the net cross-sectional area to the gross cross-sectional area of the unit;

$f_{g,i(t)}$ = compressive strength of grout batch i at age t (days) established by Eq. (8-1), psi (MPa); and

$f_{b,i}$ = compressive strength of unit batch i established by Eq. (8-2), psi (MPa).

8.3 Normalization of results:

8.3.1 Normalization of tensile test results for grouted CMU: Irrespective of failure mode, tensile test results shall all be normalized in accordance with Eq. (8-4).

$$N_{u,f_m} = N_{u,test} \cdot \alpha_{f_m,i} \tag{8-4}$$

where

N_{u,f_m} = test result normalized to f_m, lb. (kN);

$N_{u,test}$ = individual test result, lb. (kN); and

$\alpha_{f_m,i}$ = normalization factor for batch i accounting for masonry unit and grout strength as defined in Eq. (8-5).

8.3.1.1 Masonry unit and grout strength normalization factor:

$$\alpha_{f_m,i} = \left(\frac{h_g}{h_{ef}}\right)\left(\frac{2,000\,psi}{f_{g,i(t)}}\right)^{0.5} + \left(\frac{h_b}{h_{ef}}\right)\left(\frac{2,000\,psi}{f_{b,i}}\right)^{0.5} \tag{8-5}$$

where

$f_{g,i(t)}$ = compressive strength of grout batch i at test age t calculated in accordance with Eq. (8-1), psi (MPa);

$f_{b,i}$ = compressive strength of unit batch i determined in accordance with Eq. (8-2); psi (MPa)

h_{ef} = effective embedment depth, in. (mm);

h_g = portion of embedment within grout, in. (mm); and

h_b = for CMU, the portion of embedment within the unit (including face shell, bed joint, and web), in (mm).

R8.3.1 *Normalization to a grout strength of 2,000 psi (13.8 MPa) is based on the minimum grout compressive strength permitted by TMS 402/ACI 530/ASCE 5, which references ASTM C1019. Normalization to a unit strength of 2,000 psi (13.8 MPa) is based on the minimum unit strength permitted by ASTM C90 (and tested in accordance with ASTM C140). These ASTM minimums comport with the TMS 402/ACI 530/ASCE 5 minimum specified masonry strength of 1,500 psi (10.3 MPa) by the relation prescribed by* Eq. (8-3)*. The use of an exponent of 0.5 for normalization is assumed to be a conservative estimate for confined bond strength testing in grouted CMU. It is assumed in* Eq. (8-5) *that the effects of unit strength and grout strength act simultaneously on the bond capacity following a model of uniformly distributed bond stress.*

8.3.1.1.1 For tests conducted in the web, $h_b = h_{ef}$ and $h_g = 0$ in Eq. (8-5).

8.3.1.1.2 For tests conducted in bed joints, $h_g = h_{ef}$ and $h_b = 0$ in Eq. (8-5).

8.3.2 Normalization of tensile test results for ungrouted CMU: Irrespective of failure mode, tensile test results shall all be normalized in accordance with Eq. (8-6).

$$N_{u,ug,f_m} = N_{u,ug,test} \cdot \alpha_{b,i} \cdot \alpha_{thickness} \tag{8-6}$$

where

N_{u,ug,f_m} = normalized test result for anchors installed in ungrouted CMU, lbs. (kN);

$N_{u,ug,test}$ = mean test result for anchors installed in ungrouted CMU, lb. (kN);

$\alpha_{b,i}$ = reduction factor accounting for unit strength

$= \left(\frac{2,000\,psi}{f_{b,i}}\right)^{0.5}$;

$f_{b,i}$ = compressive strength of unit batch i established by Eq. (8-2), psi (MPa);

$\alpha_{thickness}$ = reduction factor accounting for tested thickness of the face shell

$= \left(\frac{1.25in}{t_{shell}}\right)^{1.5}$ for tests in the center of the cell and the bed joint;

= 1.0 for tests in the web; and

t_{shell} = measured thickness of the face shell in the center of the cell for test result, in.

8.3.3 Normalization of tensile test results for brick: Irrespective of failure mode, tensile test results shall all be normalized in accordance with Eq. (8-7).

$$N_{u,br,f_m} = N_{u,br,test} \cdot \alpha_{br,i} \qquad (8\text{-}7)$$

where

N_{u,br,f_m} = test result normalized by brick strength i, lb. (kN);

$N_{u,br,test}$ = individual test result, lb. (kN);

$\alpha_{br,i}$ = reduction factor accounting for brick compressive strength;

= $\left(\frac{f_{br,\min}}{f_{br,i}}\right)^{0.5}$;

$f_{br,\min}$ = minimum brick compressive strength specified by ASTM standard for the brick type tested, psi (MPa); and

$f_{b,i}$ = compressive strength of brick batch i established by Eq. (8-2), psi (MPa).

8.3.4 Normalization of shear test results: Irrespective of failure mode, shear test results shall all be normalized in accordance with Eq. (8-8).

$$V_{u,f_m} = V_{u,test} \cdot \alpha_{mat} \cdot \alpha_{fut} \tag{8-8}$$

where

$V_{u,x}$ = test result normalized by unit and grout strength, lb. (kN);

$V_{u,test,x}$ = test result from series x, lb. (kN);

α_{mat} = normalization factor accounting for masonry strength

= $\left(\frac{1{,}500\,psi}{f_{m,i(t)}}\right)^{0.5}$ for tests in grouted CMU with $f_{m,i(t)}$ defined by Eq. (8-3)

= $\alpha_{b,i}$ as defined in Eq. (8-6) for tests in ungrouted CMU

= $\alpha_{br,i}$ as defined in Eq. (8-7) for tests in brick; and

α_{fut} = normalization factor accounting for steel strength (see Eq. (8-9)).

8.3.4.1 Steel strength normalization factor:

$$\alpha_{fut} = \frac{f_{uta}}{f_{uta,test}} \tag{8-9}$$

where

f_{uta} = specified steel tensile strength to which the test result shall be normalized, psi (MPa); and

$f_{u,test,x}$ = measured steel tensile strength corresponding to anchors used for test series x, psi.

8.4 Establishment of Characteristic Values:

8.4.1 Evaluate the characteristic capacity—for example, N_k, τ_k, and V_s—from the mean value and the associated coefficient of variation v using Eq. (8-10).

$$F_k = \bar{F}_{u,f_m,x}\left(1 - K \cdot v_x\right) \tag{8-10}$$

where

K = tolerance factor corresponding to a 5 percent probability of nonexceedance with a confidence of 90 percent derived from a noncentral t distribution for which the population standard deviation is unknown (values for specific samples sizes n are provided in Table 8.1);

F_k = characteristic capacity (5 percent fractile), lb. (kN);

$\overline{F}_{u,f_m,x}$ = mean of test results for test series x normalized in accordance with Section 8.3, lb. (kN); and

v_x = coefficient of variation of the population sample corresponding to test series x, percent.

TABLE 8.1—STATISTICAL K FACTORS USED FOR DETERMINING CHARACTERISTIC VALUES

Number of tests n	K	Number of tests n	K
3	5.311	21	2.190
4	3.957	22	2.174
5	3.400	23	2.159
6	3.092	24	2.149
7	2.894	25	2.132
8	2.754	26	2.120
9	2.650	27	2.109
10	2.568	28	2.099
11	2.503	29	2.089
12	2.448	30	2.080
13	2.402	35	2.041
14	2.363	40	2.010
15	2.329	45	1.986
16	2.299	50	1.965
17	2.272	60	1.933
18	2.249	120	1.841
19	2.227	240	1.780
20	2.208	∞	1.645

8.5 Assessment of Characteristic Tensile Capacity Associated With Masonry Breakout and Pullout

8.5.1 Requirements on coefficient of variation:

8.5.1.1 In each reliability test series, the v_x of the peak loads shall not exceed 30 percent. For all other test series, the v_x of the peak loads shall not exceed 20 percent.

8.5.1.2 For cases where the v_x of the peak loads in reliability tests exceeds 20 percent, determine a reduction factor α_{COV} in accordance with Eq. (8-11).

8.5.1.3 For cases where the $v_{test,x}$ of the peak loads in tests other than reliability tests exceeds 15 percent, determine a reduction factor α_{COV} in accordance with Eq. (8-11).

$$\alpha_{COV} = \frac{1}{1+0.03(v_{test,x} - COV)} \leq 1.0 \qquad (8\text{-}11)$$

where

v_x = sample coefficient of variation for test series x equal to the mean divided by the standard deviation

COV = threshold coefficient of variation for adhesive anchors;
= 20 percent for peak loads from reliability tests; and
= 15 percent for peak loads from tests other than reliability tests.

8.5.2 Comparison with reference tests:

8.5.2.1 For those reliability tests listed in Table 4.1, Table 4.2, Table 4.3, or Table 4.4, for which α_{req} is defined, calculate the value of α using Eq. (8-12) and the results of the tension tests conducted in the same test member or masonry batch with anchors having the same diameter.

$$\alpha = \min\left[\frac{\overline{N}_{u,i}}{\overline{N}_{o,i}}; \frac{\overline{N}_{k,i}}{\overline{N}_{k,o,i}}\right] \leq 1.0 \qquad (8\text{-}12)$$

where

$\overline{N}_{u,i}$ = mean tensile capacity from reliability test series in masonry batch or test member i, lb. (N)

$\overline{N}_{o,i}$ = mean tensile capacity from reference test series in masonry batch or test member i, whereby replicates that are less than 85 percent of the mean capacity shall be excluded from the determination of the mean (i.e., the mean shall be recalculated with the remaining results), lb. [N]

$\overline{N}_{k,i}$ = characteristic tensile capacity from reliability test series in masonry batch or test member i calculated in accordance with Eq. (8-10), lb. [N]; and

$\overline{N}_{k,o,i}$ = characteristic tensile capacity from reference test series in masonry batch or test member i calculated in accordance with Eq. (8-10), lb. [N].

8.5.2.2 Omit comparison of the five-percent fractile values if either of the following conditions is met:

- For both test series, the COV of the failure loads $v_x \leq 10$ percent; or
- The difference in the number of tests in the series to be compared is $\Delta_n \leq 5$ and the COV of the reliability test series is equal or less than the COV of the reference test series.

8.5.3 Requirements for load-displacement behavior:

8.5.3.1 Uncontrolled slip under tensile load corresponds to the loss of adhesion between the adhesive material and the masonry. Upon loss of adhesion, both the anchor element and adhesive material are extracted together from the masonry. In such cases, the subsequent load-slip behavior is substantially dependent on the roughness of the drilled hole. The onset of uncontrolled slip is therefore defined as loss of adhesion and the load corresponding to loss of adhesion is denoted as N_{adh}.

8.5.3.2 Evaluate the load N_{adh} for each of the reliability test series (Table 8.2), the service-condition test series (Table 8.3), and the reliability test series (Table 6.1).

TABLE 8.2—RELIABILITY TESTS RELEVANT FOR DETERMINATION OF $\min\left(\alpha / \alpha_{req}\right)$ AND $\min \alpha_{adh}$ IN EQS. (8-17) AND (8-18) FOR GROUTED CMU, EQS. (8-25) AND (8-26) IN UNGROUTED CMU, AND EQS. (8-29) AND (8-30) IN BRICK

Table 4.1 (Grouted CMU)			Table 4.2 (Grouted CMU)				Table 4.3 (Ungrouted CMU)			Table 4.4 (Brick)		
Test No.			Test no.				Test no.			Test no.		
3	4	5	3	4	5	6	3	4	5	3	4	5

TABLE 8.3—SERVICE-CONDITION TESTS RELEVANT FOR DETERMINATION OF $\min\left(\alpha / \alpha_{req}\right)$ AND $\min \alpha_{adh}$ IN EQS. (8-17) AND (8-18) FOR GROUTED CMU, EQS. (8-25) AND (8-26) IN UNGROUTED CMU, AND EQS. (8-29) AND (8-30) IN BRICK

Table 4.1 (Grouted CMU)			Table 4.2 (Grouted CMU)				Table 4.3 (Ungrouted CMU)				Table 4.4 (Brick)			
Test No.			Test no.				Test no.				Test no.			
7a	7b	7c	8a	8b	8c	10	6a	6b	6c	8	6a	6b	6c	8

8.5.3.3 Evaluate the load N_{adh} by examination of the load-displacement curve recorded during the test. In general, loss of adhesion is characterized by a significant change in slope of the load-displacement curve as shown in Figure 8.1(a).

8.5.3.4 In cases where the load corresponding to loss of adhesion is not readily identified by direct observation of the load-displacement curve, evaluate the load N_{adh} as follows:

1. Compute the tangent to the load-displacement curve at a load $N = 0.3N_u$, where N_u is the peak tensile load resisted by the anchor in the test. In general, the tangent stiffness $k_{\tan}$ can be conservatively estimated as the secant stiffness between the origin of the load-displacement curve and the point defined by $0.3N_u$ and $\Delta_{0.3}$ in Eq. (8-13).

$$k_{\tan} \approx \frac{0.3N_u - N_{origin}}{\Delta_{0.3} - \Delta_{origin}} \tag{8-13}$$

where $\Delta_{0.3}$ is the anchor displacement at $N = 0.3N_u$.

2. Multiply the tangent stiffness by 2/3.

3. Project a straight line from the origin of the load-displacement curve with a slope corresponding to the stiffness as calculated in No. 2.

4. The load N_{adh} shall be taken from the point of intersection between the projected line and the measured load-displacement curve (Figure 8.1(b)).

5. If the peak load occurs at a displacement that is less than that corresponding to the intersection of the projected line and the load-displacement curve, then N_{adh} shall be taken as the peak load (Figure 8.1(c)).

6. If the displacement $\Delta_{0.3} \leq 0.002$ in. (0.05 mm), the origin of the point of the projected line shall be shifted to a point on the load-displacement curve given by $0.3N_u$ and $\Delta_{0.3}$ (Figure 8.1(d)).

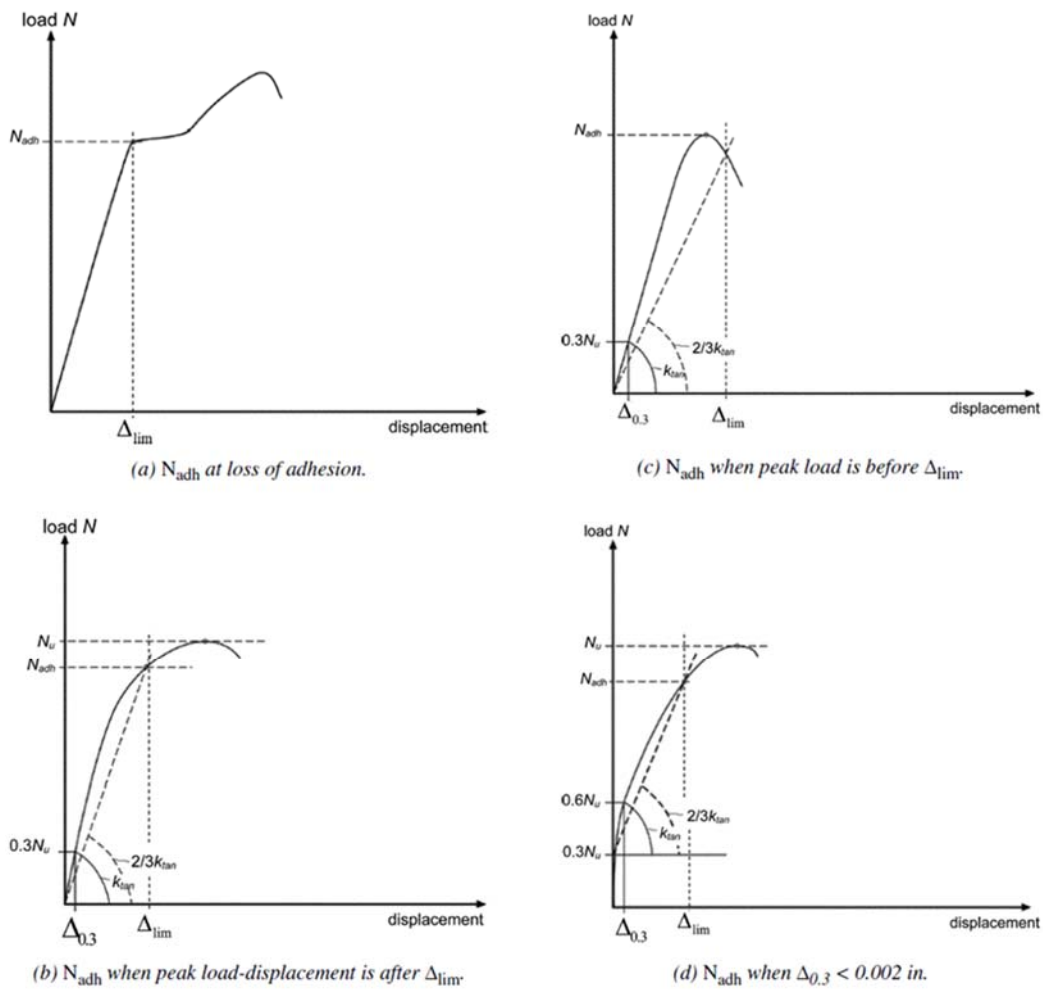

FIGURE 8.1—EVALUATION OF N_{adh} LOAD UNDER DIFFERENT LOAD-DISPLACEMENT CONDITIONS

8.5.3.5 For all values of N_{adh} calculated in accordance with Section 8.5.3.3 or Section 8.5.3.4, evaluate the adjustment factor α_{adh} using Eq. (8-14):

$$\alpha_{adh,x,y} = \frac{N_{adh,x,y}}{0.5N_{u,x,y}} \leq 1.0 \tag{8-14}$$

where

$N_{adh,x,y}$ = tensile load corresponding to loss of adhesion for Test Series x, replicate y, lb. (kN); and

$N_{u,x,y}$ = tensile capacity for Test Series x, replicate y, lb. (kN)

8.5.3.6 In cases where a minimum of 10 replicates have been performed in a given test series, it shall be permitted to calculate α_{adh} for that test series in accordance with Eq. (8-15) instead of Eq. (8-14).

$$\alpha_{adh,x} = \frac{\min N_{adh,x}}{0.5\bar{N}_{u,x}} \leq 1.0 \tag{8-15}$$

where

$\min N_{adh,x}$ = minimum tensile load corresponding to loss of adhesion for Test Series x, lb.; and

$\bar{N}_{u,x}$ = mean tensile capacity for Test Series x.

8.5.3.7 Where failure under tensile load is characterized by slip between the anchor rod and adhesive material along the entire embedded length—as indicated by extraction of the threaded rod without adherence of

adhesive to the rod—evaluation of the load corresponding to loss of adhesion is not required and the value of α_{adh} shall be taken as 1.0.

8.5.4 Bond stress of anchors in grouted CMU:

8.5.4.1 Calculate the corresponding bond stress $\tau_{u,nom}$ for each reference and service-condition tension test normalized to grout strength of 2,000 psi (13.8 MPa) and unit strength of 2000 psi (13.8 MPa) using Eq. (8-16).

$$\tau_{u,nom} = \alpha_{masonry} \cdot \alpha_{setup} \cdot \frac{N_{u,f_m}}{\pi\, d_a\, h_{ef}} \tag{8-16}$$

where

N_{u,f_m} = peak tensile load measured in a tension test conducted in test series x normalized to grout strength $f_g = 2{,}000$ psi (13.8 MPa) and unit strength $f_b = 2{,}000$ psi (13.8 MPa) in accordance with Eq. (8-4), lb. (kN);

$\alpha_{masonry}$ = reduction factor for the inhomogeneity of masonry materials in breakout and bond strength determination

= 0.70; and

α_{setup} = 0.75 for confined tension tests in uncracked masonry

= 0.70 for confined tension tests in cracked masonry.

8.5.4.2 Nominal characteristic bond stress:

8.5.4.2.1 Calculate the nominal characteristic bond stress value $\tau_{k,nom(cr,uncr)}$ from the values $\tau_{u,nom}$ in accordance with Eq. (8-10).

8.5.4.2.2 If the bond stress can be shown to vary with anchor diameter in a nonrandom manner, report the bond stress as a continuous function of anchor diameter, whereby the number of replicates used to establish the characteristic stress shall be permitted to be taken as the sum of all tests included in the assessment.

8.5.4.2.3 If bond stress can be shown to be constant across anchor diameters, report a single bond stress for all anchor diameters, whereby the number of replicates used to establish the characteristic stress shall be permitted to be taken as the sum of all tests included in the assessment.

8.5.4.2.4 If bond stress varies randomly from anchor diameter to anchor diameter, evaluate each anchor diameter independently. In this case, the number of replicates used to establish the characteristic stress shall be limited to the total number of replicates performed for each anchor diameter.

8.5.4.3 Determination of limiting characteristic bond stress in fully grouted masonry:

8.5.4.3.1 For adhesive anchors qualified in accordance with Table 4.1, reduce the nominal characteristic bond stress in uncracked masonry, $\tau_{k,nom,uncr}$, in accordance with Eq. (8-17) and report the limiting characteristic bond stress in uncracked masonry, $\tau_{k,uncr}$,for each combination of mandatory and optional use conditions specified.

8.5.4.3.2 For adhesive anchors qualified in accordance with Table 4.2, reduce the nominal characteristic bond stress in uncracked masonry, $\tau_{k,nom,uncr}$, in accordance with Eq. (8-17) and the nominal characteristic bond stress in cracked masonry, $\tau_{k,nom,cr}$, in accordance with Eq. (8-18) and report the limiting characteristic bond stresses in uncracked masonry, $\tau_{k,uncr}$, and cracked masonry, $\tau_{k,cr}$, for each combination of mandatory and optional use conditions specified.

$$\tau_{k,uncr} = \tau_{k,nom,uncr} \cdot \beta \cdot \alpha_{lt} \cdot \alpha_{st} \cdot \alpha_{dur} \cdot \alpha_{\rho} \cdot \alpha_{COV} \cdot \alpha_{cat2} \quad (8\text{-}17)$$

$$\tau_{k,cr} = \tau_{k,nom,cr} \cdot \beta \cdot \alpha_{lt} \cdot \alpha_{st} \cdot \alpha_{dur} \cdot \alpha_{\rho} \cdot \alpha_{COV} \cdot \alpha_{cat2} \quad (8\text{-}18)$$

where

$\tau_{k,nom,uncr}$ = uncracked nominal characteristic bond stress; taken as the least uncracked nominal bond stress observed in reference tests in the center of the cell, the bed joint, and the web, psi (MPa);

= $\min\left(\tau_{k,1a}, \tau_{k,1b}, \tau_{k,1c}\right)$;

$\tau_{k,(1a,1b,1c)}$ = characteristic bond stresses from Table 4.1 and Table 4.2, Tests 1a, 1b, and 1c, respectively, as determined with Eq. (8-10) and normalized in accordance with Section 8.3.1, psi (MPa);

$\tau_{k,nom,cr}$ = cracked nominal bond stress; taken as $\tau_{k,nom,uncr} \cdot \alpha_{cr}$, psi (MPa); with

α_{tr} = ratio of cracked to uncracked tensile capacity in the bed joint (i.e., $\tau_{k,1e} / \tau_{k,1b}$);

β = $\min\left[\min\left(\alpha/\alpha_{req}\right); \min \alpha_{adh}\right]$ for the reference, reliability and service-condition tests listed in Table 8.2 and Table 8.3, where α is the ratio of reliability test result to reference test result evaluated for all reliability tests listed in Table 8.2; α_{adh} is the reduction factor for loss of adhesion as evaluated for all reliability tests listed in Table 8.2 and for all service-condition tests listed in Table 8.3;

α_{req} = threshold value of α given in Table 4.1 or Table 4.2;

α_{lt} = reduction factor for maximum long-term temperature as determined in Section 7.4;

α_{st} = reduction factor for maximum short-term temperature as determined in Section 7.4

α_{dur} = reduction factor for durability as determined in Section 7.7;

α_{ρ} = reduction factor for reduced load in freezing-and-thawing tests as determined in Section 6.7;

α_{COV} = reduction factor associated with the coefficient of variation of peak loads as determined in Section 8.5.1; and

α_{cat2} = reduction factor for Anchor Category 2 as determined in Section 6.5.

8.5.4.3.3 Bond resistance for sustained loading: Further modify the limiting characteristic bond stress $\tau_{k(cr,uncr)}$ for sustained tensile load cases in accordance with Eq. (8-19).

$$\tau_{k,sust(cr,uncr)} = \tau_{k(cr,uncr)} \cdot \alpha_{\rho,sust} \tag{8-19}$$

where

$\alpha_{\rho,sust}$ = reduction factor for sustained tensile loading in accordance with Eq. (6-7); and

$\tau_{k,sust(cr,uncr)}$ = bond resistance under sustained tensile loading for either cracked or uncracked masonry, psi (MPa).

8.5.4.3.4 Bond capacity for seismic tension*:* Further modify the limiting characteristic bond resistance $\tau_{k(cr,uncr)}$ for seismic tension loading cases in accordance with Eq. (8-20).

$$\tau_{k,seis(cr,uncr)} = \tau_{k(cr,uncr)} \cdot \alpha_{N,seis} \tag{8-20}$$

where

$\alpha_{N,seis}$ = reduction factor for seismic tensile loading calculated using Eq. (7-10); and

$\tau_{k,seis(cr,uncr)}$ = bond capacity under seismic tensile loading, psi (MPa).

8.5.4.3.5 Bond capacity for installations in the top of fully grouted masonry: Further modify the limiting characteristic bond capacity $\tau_{k(cr,uncr)}$ for top-of-wall installation cases in accordance with Eqs. (8-21) through (8-24).

$$\tau_{k,top,uncr} = \tau_{k,uncr} \cdot \alpha_{top,uncr} \text{ psi} \quad (8\text{-}21)$$

where

$\tau_{k,top,uncr}$ = bond capacity of top-of-wall installations in uncracked masonry, psi (MPa);

$\tau_{k,uncr}$ = characteristic bond stress in uncracked masonry defined in Eq. (8-17), psi (MPa);

$\alpha_{top,uncr}$ = reduction factor for uncracked top-of-wall installations, i.e., $\tau_{k,1d} / \tau_{k,nom,uncr}$; and

$\tau_{k,nom,uncr}$ = uncracked nominal characteristic bond stress defined in Eq. (8-17), psi (MPa).

$$\tau_{k,top,cr} = \tau_{k,top,uncr} \cdot \alpha_{cr} \text{ psi (Mpa)} \quad (8\text{-}22)$$

where

$\tau_{k,top,cr}$ = bond capacity of top-of-wall installations in cracked masonry, psi (MPa); and

α_{cr} = ratio of cracked to uncracked tensile capacity in the bed joint (i.e., $\tau_{k,1e} / \tau_{k,1b}$).

$$\tau_{k,top,sust(cr,uncr)} = \tau_{k,top(cr,uncr)} \cdot \alpha_{\rho,sust} \text{ psi (Mpa)} \quad (8\text{-}23)$$

where

$\tau_{k,top,sust,(cr,uncr)}$ = bond capacity of top-of-wall installations under seismic tensile loading for cracked and uncracked masonry, psi (MPa) respectively; and

$\alpha_{\rho,sust}$ = reduction factor for sustained tensile loading in accordance with Eq. (6-7).

$$\tau_{k,top,seis(cr,uncr)} = \tau_{k,top(cr,uncr)} \cdot \alpha_{N,seis} \text{ psi} \quad (8\text{-}24)$$

where

$\tau_{k,top,seis,(cr,uncr)}$ = bond capacity of top-of-wall installations under seismic tensile loading for cracked and uncracked masonry, psi (MPa) respectively; and

$\alpha_{N,seis}$ = reduction factor for seismic tensile loading calculated using Eq. (7-10).

8.5.5 Capacity of anchors in ungrouted CMU:

8.5.5.1 Determine the uncracked characteristic capacity, $N_{k,ug,uncr}$, in accordance with Eq. (8-25).

$$N_{k,ug,uncr} = \alpha_{drill} \cdot N_{k,ug,nom} \cdot \beta \cdot \alpha_{lt} \cdot \alpha_{st} \cdot \alpha_{dur} \cdot \alpha_{\rho} \cdot \alpha_{COV} \cdot \alpha_{cat2} \quad (8\text{-}25)$$

where

$N_{k,ug,uncr}$ = uncracked characteristic capacity in ungrouted CMU, lb. (kN);

α_{drill} = 0.75 as the default design value and in all cases where rotation-mode-only drilling is employed during qualification testing;

= 1.0 where hammer-mode drilling is employed during qualification testing. The drill type used for testing, as characterized by the impact energy used for testing, shall be reported and the evaluation report shall note the required maximum impact energy permitted. This information shall be included in the MPII.

$N_{k,ug,nom}$ = nominal capacity in ungrouted CMU; taken as the least nominal capacity observed in reference tests in the center of the cell, the bed joint, and the web, lb. (kN).

= $\min\left(N_{k,ug,1a}, N_{k,ug,1b}, N_{k,ug,1c}\right)$;

$N_{k,ug(1a,1b,1c)}$ = characteristic capacities of Table 4.3 tests 1a, 1b, and 1c, respectively, as determined by Eq. (8-10) with normalization in accordance with Section 8.3.2, lb. (kN);

β = $\min\left[\min\left(\alpha/\alpha_{req}\right);\min\alpha_{adh}\right]$ for the reliability and service-condition tests listed in Table 8.2 and Table 8.3, where α is the ratio of reliability test result to reference test result evaluated for all reliability tests listed in Table 8.2; α_{adh} is the reduction factor for loss of adhesion as evaluated for all reliability tests listed in Table 8.2 and for all service-condition tests listed in Table 8.3;

α_{req} = threshold value of α given in Table 4.3

α_{lt} = reduction factor for maximum long-term temperature as determined in Section 7.4;

α_{st} = reduction factor for maximum short-term temperature as determined in Section 7.4;

α_{dur} = reduction factor for durability as determined in Section 7.7;

α_{ρ} = reduction factor for reduced load in freezing-and-thawing tests as determined in Section 6.7 with tests conducted in grouted CMU;

α_{COV} = reduction factor associated with the coefficient of variation of peak loads as determined in Section

8.5.1 but applied only to tests conducted in ungrouted CMU; and

α_{cat2} = reduction factor for Anchor Category 2 as determined in Section 6.5.

8.5.5.2 Tensile capacity for cracked ungrouted CMU:

Further modify the limiting characteristic ungrouted tensile capacity $N_{k,ug,uncr}$ for cracked masonry capacity in accordance with Eq. (8-26).

$$N_{k,ug,cr} = \alpha_{cr} \cdot N_{k,ug,uncr} \tag{8-26}$$

where

$N_{k,ug,uncr}$ = uncracked characteristic resistance determined in accordance with Eq. (8-25), lb. (kN); and

α_{cr} = reduction factor to account for the presence of cracking

= 0.5.

8.5.5.3 Tensile capacity for sustained loading: Further modify the limiting characteristic ungrouted tensile capacities $N_{k,ug(cr,uncr)}$ for sustained tensile load cases in accordance with Eq. (8-27).

$$N_{k,ug,sust(cr,uncr)} = N_{k,ug(cr,uncr)} \cdot \alpha_{\rho,sust,ug} \tag{8-27}$$

where

$N_{k,ug,sust(cr,uncr)}$ = characteristic tensile capacity under sustained tensile loading for cracked and uncracked masonry, lb. (kN) respectively;

$N_{k,ug,(cr,uncr)}$ = characteristic tensile capacity for cracked and uncracked masonry determined in Eq. (8-25) and Eq. (8-26), lb. (kN) respectively; and

$\alpha_{\rho,sust,ug}$ = reduction factor for sustained tensile loading in accordance with Eq. (6-7) with tests conducted in ungrouted CMU.

8.5.5.4 Tensile capacity for seismic tension*:* Further modify the limiting characteristic resistance $N_{k,ug}$ for seismic tension loading cases in accordance with Eq. (8-28).

$$N_{k,ug,seis(cr,uncr)} = N_{k,ug(cr,uncr)} \cdot \alpha_{N,seis} \qquad (8\text{-}28)$$

where

$N_{k,ug,seis(cr,uncr)}$ = characteristic tensile capacity under seismic tensile for cracked and uncracked masonry, lb. (kN) respectively;

$N_{k,ug,(cr,uncr)}$ = characteristic tensile capacity for cracked and uncracked masonry determined in Eqs. (8-25) and (8-26), lb. (kN) respectively; and

$\alpha_{N,seis}$ = reduction factor for seismic tensile loading calculated using Eq. (7-10) with tests conducted in ungrouted CMU

8.5.6 Capacity of anchors in brick:

8.5.6.1 Determine the uncracked characteristic capacity, $N_{k,br,uncr}$, in accordance with Eq. (8-29).

$$N_{k,br,uncr} = \alpha_{drill} \cdot N_{k,br,nom} \cdot \beta \cdot \alpha_{lt} \cdot \alpha_{st} \cdot \alpha_{dur} \cdot \alpha_{\rho} \cdot \alpha_{COV} \cdot \alpha_{cat2} \quad (8\text{-}29)$$

where

α_{drill} = 0.75 as the default design value and in all cases where rotation-mode-only drilling is employed during qualification testing;

= 1.0 where hammer-mode drilling is employed during qualification testing. The drill type used for testing, as characterized by the impact energy used for testing, shall be reported and the evaluation report shall note the required maximum impact energy permitted. This information shall be included in the MPII.

$N_{k,br,nom}$ = nominal capacity in brick; taken as the least nominal capacity observed in reference tests in the center of the cell, the bed joint, the web, and the head joint, lb. (kN);

= $\min\left(N_{k,br,1a}, N_{k,br,1b}, N_{k,br,1c}, N_{k,br,1d}\right)$;

$N_{k,br(1a,1b,1c,1d)}$ = characteristic capacities of Table 4.3, Tests 1a, 1b, 1c, and 1d, respectively, as determined with Eq. (8-10) and normalized in accordance with Section 8.3.3, lb. (kN);

β = $\min\left[\min\left(\alpha/\alpha_{req}\right);\min\alpha_{adh}\right]$ for the reliability and service-condition tests listed in Table 8.2 and Table 8.3, where α is the ratio of reliability test result to reference test result evaluated for all reliability tests listed in Table 8.2; α_{adh} is the reduction factor for loss of adhesion as evaluated for all reliability tests listed in Table 8.2 and for all service-condition tests listed in Table 8.3;

α_{req} = threshold value of α given in Table 4.4;

α_{lt} = reduction factor for maximum long-term temperature as determined in Section 7.4;

α_{st} = reduction factor for maximum short-term temperature as determined in Section 7.4;

α_{dur} = reduction factor for durability as determined in Section 7.7;

α_{ρ} = reduction factor for reduced load in freezing-and-thawing tests as determined in Section 6.7 with tests conducted in grouted CMU;

α_{COV} = reduction factor associated with the coefficient of variation of peak loads as determined in Section 8.5.1 but applied only to tests conducted in ungrouted CMU; and

α_{cat2} = reduction factor for Anchor Category 2 as determined in Section 6.5.

8.5.6.2 Tensile capacity for cracked brick: Further modify the limiting characteristic ungrouted tensile capacity $N_{k,br,uncr}$ for cracked masonry capacity in accordance with Eq. (8-30).

$$N_{k,br,cr} = \alpha_{cr} \cdot N_{k,br,uncr} \tag{8-30}$$

where

$N_{k,br,uncr}$ = uncracked characteristic resistance determined in accordance with Eq. (8-25), lb. (kN); and

α_{cr} = reduction factor to account for the presence of cracking

= 0.5.

8.5.6.3 Resistance for sustained loading: Further modify the limiting characteristic ungrouted tensile capacity $N_{k,br(cr,uncr)}$ for sustained tensile load cases in accordance with Eq. (8-31).

$$N_{k,br,sust(cr,uncr)} = N_{k,br(cr,uncr)} \cdot \alpha_{\rho,sust} \tag{8-31}$$

where

$\alpha_{\rho,sust}$ = reduction factor for sustained tensile loading in accordance with Eq. (6-7) with tests conducted in grouted CMU; and

$N_{k,br,sust}$ = resistance under sustained tensile loading, lb. (kN).

8.5.6.4 Resistance for seismic tension*:* Further modify the limiting characteristic resistance $N_{k,br}$ for seismic tension loading cases in accordance with Eq. (8-32).

$$N_{k,br,seis} = N_{k,br} \cdot \alpha_{N,seis} \tag{8-32}$$

where

$\alpha_{N,seis}$ = reduction factor for seismic tensile loading calculated using Eq. (7-10) with tests conducted in brick; and

$N_{k,br,seis}$ = resistance under seismic tensile loading, lb. (kN).

8.5.7 Anchor Category*:* Refer to Section 6.5.3.

8.5.8 Adjustment for reduced load in freeze/thaw and sustained loading tests shall be permitted if the limiting characteristic bond stress is reduced. See Section 6.7.3 and Section 6.9.5.

8.6 Assessment of steel tensile capacity:

8.6.1 Evaluate the steel tensile capacity in accordance with *ACI 318 Section 17.4.1.2* (*Section D.5.1.2*).

8.6.2 Where the cross-section of the steel anchor element possesses a variable cross-section, $A_{se,N}$, shall be taken as the minimum cross-sectional area over the load-bearing length of the anchor.

8.7 Assessment of shear capacity:

8.7.1 Anchors without a nonuniform cross-section (Section 1.4.6) and anchors not incorporating internally threaded inserts:

8.7.1.1 Anchors in grouted CMU*:* The steel shear capacity shall be evaluated in accordance with *ACI 318 Section 17.5.1.2* (Section *D.6.1.2*).

8.7.1.1.1 For anchors without the threads in the critical shear plane, $A_{se,V}$ shall be taken as the gross anchor cross-sectional area.

8.7.1.1.2 For anchors with threads in the shear plane but without a reduced cross-section, $A_{se,V}$ shall be taken in accordance with Eq. (8-33).

$$A_{se,V} = \frac{\pi}{4}\left(d_a - \frac{0.9743}{n_t}\right)^2 \quad (8\text{-}33)$$

where n_t is the number of threads per inch.

8.7.1.2 Anchors in ungrouted CMU*:* The characteristic shear resistance, $V_{s,ug}$, shall be reported as equal to $N_{k,ug}$, where $N_{k,ug}$ is determined in accordance with Section 8.5.5, but shall not exceed the value calculated in accordance with *ACI 318 Section 17.5.1.2* (*Section D.6.1.2*).

8.7.1.3 Anchors tested in brick masonry*:* The characteristic shear resistance, $V_{s,br}$, shall be determined by testing as prescribed in Section 7.9, but shall not exceed the value calculated in accordance with *ACI 318 Section 17.5.1.2* (*Section D.6.1.2*).

8.7.2 Anchors with a nonuniform cross-section (Section 1.4.6) and anchors incorporating internally threaded inserts:

8.7.2.1 Anchors in grouted CMU*:* The characteristic shear capacity, V_s, shall be determined by testing as prescribed in Section 7.9, but shall not exceed the value determined in accordance with *ACI 318 Section 17.5.1.2* (*Section D.6.1.2*).

8.7.2.2 Anchors in ungrouted CMU*:* The characteristic shear resistance, $V_{s,ug}$, shall be reported as equal to $N_{k,ug}$, where $N_{k,ug}$ is determined in accordance with Section 8.5.5 but shall not exceed the value determined in accordance with *ACI 318 Section 17.5.1.2* (*Section D.6.1.2*).

8.7.2.3 Anchors in brick masonry*:* The characteristic shear resistance, $V_{s,br}$, shall be determined by testing as prescribed in Section 7.9, but shall not exceed the value calculated in accordance with *ACI 318 Section 17.5.1.2* (*Section D.6.1.2*).

8.7.3 Seismic shear capacity*:* Further modify the characteristic shear capacity V_s for seismic load cases in accordance with Eq. (8-34).

$$V_{s,seis(ug,br)} = V_{s(ug,br)} \cdot \alpha_{V,seis} \tag{8-34}$$

where

$\alpha_{V,seis}$ = reduction factor for seismic shear loading specific to each material type as described in Section 7.10.6.2;

$V_{s(ug,br)}$ = characteristic steel shear capacity determined in accordance with Section 8.7.1 and/or Section 8.7.2 for each material type as applicable, lb. (kN); and

$V_{s(ug,br)}$ = seismic shear capacity specific to each material type, lb. (kN).

8.7.3.1 Anchors in grouted CMU*:* $\alpha_{V,seis}$ shall be derived from testing in grouted CMU.

8.7.3.2 Anchors in ungrouted CMU:

8.7.3.2.1 For anchor elements with uniform cross section and not including internally threaded inserts, $\alpha_{V,seis}$ shall be taken from testing in grouted CMU.

8.7.3.2.2 For anchor elements with nonuniform cross section or including internally threaded inserts, $\alpha_{V,seis}$ shall be taken from testing in ungrouted CMU with the respective elements.

8.7.3.3 Anchors in brick masonry*:* $\alpha_{V,seis}$ shall be derived from testing in brick masonry.

8.8 Establishment of Hole Cleaning Procedures: Hole cleaning procedures given in the MPII shall correspond to the procedures used in the test program. If no hole cleaning is used in the test program, it shall be permitted to specify installation of the anchor without hole cleaning. Report the hole cleaning procedures used.

8.9 Assessment Based on Installation and Environmental Conditions: For use restrictions based on installation conditions and environmental tests performed within the anchor assessment program, refer to Table 8.4. Report any usage restrictions.

TABLE 8.4—LIMITATIONS ON USE OF ADHESIVE ANCHORS BASED ON ENVIRONMENTAL CONDITIONS

Reliability and service condition tests performed				Permitted use conditions		
				Applications limited to dry interior environments without aggressive atmospheric conditions*	Applications in interior or exterior environments	
Table 4.1	**Table 4.2**	**Table 4.3**	**Table 4.4**		Without aggressive atmospheric conditions†	With aggressive atmospheric conditions‡
3	3	3	3		X	X
8a	9a	7a	7a	X	X	X
8b	9b	7b	7b			X

* Use in exterior or aggressive exposure conditions is predicated on the appropriate steel type or coating.

†Classification predicated on exposure to alkaline environment but no exposure to sulfuric atmosphere.

‡ Classification predicated on exposure to alkaline environment and sulfuric atmosphere.

9.0 QUALITY CONTROL

9.1 The products shall be manufactured under an approved quality control program with inspections by ICC-ES or by a properly accredited inspection agency that has a contractual relationship with ICC-ES.

9.2 Quality documentation complying with the ICC-ES Acceptance Criteria for Quality Documentation (AC10) shall be submitted to ICC-ES.

9.3 A qualifying inspection shall be conducted at each manufacturing facility when required by the ICC-ES Acceptance Criteria for Inspections and Inspection Agencies (AC304).

10.0 EVALUATION REPORT RECOGNITION

10.1 The evaluation report shall include the basic information required by Section 2.1, including sufficient information for complete product identification, packaging, MPII, quality control, and design data.

10.2 The evaluation report shall also include, but not be limited to, the following:

1. Description of the product;
2. Product labelling and marking, including lot numbers and batches;
3. Anchor performance data in accordance with these criteria as reported in Table 10.1;
4. Anchor identification requirements in accordance with Section 2 of this criteria;
5. Design requirements in accordance with Section 3 of this criteria;
6. Special inspection requirements;

7. Verification of masonry type for ungrouted CMU applications;

8. Service temperature range;

9. Restrictions on use with respect to masonry cracking as follows:

- Where the anchor has been qualified in accordance with Table 4.1, anchors are limited to installation in masonry that is uncracked and is expected to remain uncracked for the service life of the anchor.
- Where the anchor has been qualified in accordance with Table 4.2, anchors are permitted to be installed in masonry that is cracked or is expected to crack during the service life of the anchor.

10. As applicable, the following:

- Anchor elements placed in the top of grouted concrete masonry cells and bond beams shall be positioned to maintain a minimum distance between the elements and the masonry unit as established by tests but no less than ¼ in. (6.4 mm) in fine grout or ½ in. (12.7 mm) in coarse grout. Anchor elements placed in drilled holes in the face shells of ungrouted CMU units shall be permitted to contact the masonry unit where the elements pass through the face shell, but the portion of the element that is within the grouted cell shall be positioned to maintain a minimum distance between the end of the elements and the masonry unit as established by tests but no less than ¼ in. (6.4 mm) of fine grout between the end of each element and the masonry unit or ½ in. (12.7 mm) of coarse grout between the end of each element and the masonry unit.
- Limitations on use based on environmental conditions in accordance with Table 8.4.

- When recognition is desired for exterior exposure or damp environments, evidence of durability established by performing the freezing and thawing tests described in Section 6.7. The steel exposed to earth, weather, or a mean relative humidity exceeding 75 percent shall be corrosion-resistant Type 304 or 316 stainless steel or zinc-coated steel. The zinc coating on threaded rod shall be either hot-dipped in accordance with ASTM A153 with a Class B coating weight, or mechanically deposited in accordance with ASTM B695 with a coating having a minimum thickness equivalent to ASTM A153 Class B. Other corrosion-resistant coatings shall be demonstrated through tests to be equivalent to the coatings previously described. In addition, the corrosion-resistant materials shall be tested for conformance to the specified standards.

10.3 Special Inspection:

10.3.1 General inspection requirements: At a minimum, periodic special inspection shall be provided for all anchors. Continuous special inspection shall be provided for anchors designed to resist sustained tension loads.

10.3.1.1 Fully grouted CMU requirements:

1. The general requirements of Section 10.3.1 shall be observed.
2. Installation in head joints shall not be permitted.
3. Only systems qualified for installation in grouted CMU shall be permitted.

10.3.1.2 Ungrouted CMU inspection requirements:

1. The general requirements of Section 10.3.1 shall be observed.

2. Installation in head joints shall not be permitted.

3. Only systems qualified for installation in ungrouted CMU shall be permitted.

4. Design assumptions about integrity of the face shell shall be verified; where design is predicated on the preservation of the face shell throughout its thickness (e.g., using rotary-only drilling), hammer-mode drilling shall not be permitted and no spalling shall be permitted along the entire depth of the borehole.

10.3.1.3 Partially grouted CMU inspection requirements:

1. The general requirements of Section 10.3.1 shall be observed.

2. Installation in head joints shall not be permitted.

3. Installation in grouted and/or ungrouted cells shall correspond with design specifications. The grouting condition shall be verified prior to installation.

4. Anchors installed in grouted cells shall follow the inspection requirements of Section 10.3.1.1.

5. Anchors installed in ungrouted cells shall follow the inspection requirements of Section 10.3.1.2.

10.3.1.4 ASTM C62/C216 solid brick masonry inspection requirements:

1. The general requirements of Section 10.3.1 shall be observed.

2. Only systems qualified for installation in the specified combination of brick unit type (C62 or C216) and grade (MW, SW, or NW) shall be permitted.

10.3.1.5 ASTM C652 hollow brick masonry inspection requirements:

1. The general requirements of Section 10.3.1 shall be observed.

2. Installation in head joints shall not be permitted.

3. Only systems qualified for installation in the specified combination of brick class (H40V, H60V), shell type (solid shell, double shell, or cored shell), and grade (MW, SW, or NW) shall be permitted.

10.3.2 Continuous special inspection: Where required, a program for continuous special inspection shall conform to the following additional requirements:

10.3.2.1 The general requirements of Section 10.3.1 and its relevant subsection(s) shall be observed.

10.3.2.2 The special inspector shall observe all aspects of anchor installation.

10.3.2.3 At minimum, the following items shall be verified:

1. hole drilling method in accordance with MPII;

2. hole location, diameter and depth;

3. installation outside of head joints (CMU construction only);

4. hole cleaning in accordance with MPII;

5. anchor element type, material type, grouting condition, diameter and length;

6. specific requirements to material type and grouting condition from applicable Section 10.3.1.1 through Section 10.3.1.5;

7. adhesive identification and expiration date; and

8. adhesive installation in accordance with MPII.

10.3.3 *Periodic special inspection*—Where required, a program for periodic special inspection shall conform to the following additional requirements:

10.3.3.1 The general requirements of Section 10.3.1 shall be observed.

10.3.3.2 The special inspector shall verify the initial installations of each type and size of adhesive anchor by construction personnel on site in accordance with Section 10.3.2.3. Subsequent installations of the same anchor type and size by the same construction personnel shall be permitted to be performed in the absence of the special inspector. Any change in the anchor product being installed or the personnel performing the installation shall require an initial inspection in accordance with Section 10.3.2.3. For ongoing installations over an extended period, the special inspector shall make regular inspections to confirm correct handling and installation of the product.

10.3.4 Proof loading program: Where required, a program for on-site proof loading (proof loading program) to be conducted as part of the special inspection shall conform to the following minimum requirements:

10.3.4.1 The proof loading program shall be established by the registered design professional of record. As a minimum, the following requirements shall be addressed in the proof loading program:

1. frequency of proof loading based on anchor type, diameter, embedment;
2. proof loads by anchor type, diameter, embedment and location;
3. acceptable displacements at proof load;
4. remedial action in the event of failure to achieve proof load or excessive displacement.

10.3.4.2 Unless otherwise directed by the registered design professional of record, proof loads shall be applied as confined tension tests (see Figure 4.3). Proof load levels shall not exceed the lesser of 50% of expected ultimate load based on adhesive bond strength nor 80% of the anchor yield strength. The proof load shall be maintained at the required load level for a minimum of 10 seconds.

10.4 Conditions of Use: The evaluation report shall include the following as conditions of use:

10.4.1 Treated wood: Steel anchoring materials in contact with preservative-treated and fire-retardant-treated wood shall be of zinc-coated steel

or stainless steel. The coating weights for zinc-coated steel shall be in accordance with ASTM A153 or ASTM B695 with a Class 55 min. coating.

10.4.2 Damp holes*:* Anchors shall be recognized for installation in damp holes, provided dampness tests in accordance with Section 6.5 of these criteria show compliance with the conditions of acceptance.

10.4.3 Anchors are not permitted for overhead installations.

10.4.4 (This version applies where testing has been performed in fully grouted concrete masonry unit construction.) **Fully grouted CMU construction:** Anchors are recognized for use to resist static tension and static shear loads in fully grouted concrete masonry unit (CMU) construction.

10.4.5 (This version applies where testing has been performed in the open cells of partially grouted concrete masonry unit construction.) **Partially grouted or ungrouted CMU construction:** Anchors are recognized for use to resist static tension and static shear loads in partially grouted or ungrouted concrete masonry unit construction.

10.4.6 (This version applies where testing has been performed in clay brick masonry unit construction.) **Clay brick masonry construction:** Anchors are recognized for use to resist static tension and static shear loads in clay brick masonry construction.

10.4.7 **Fatigue and Shock Loading:** The use of anchors to resist fatigue or shock loading is beyond the scope of this report**.**

10.4.8 **Wall Installations:** Adhesive anchors are permitted to be used to resist tension and shear forces in the face of wall installations only if

consideration is given to the effects of elevated temperature conditions on anchor performance.

10.4.9 Fire-resistive Construction: Anchors are not permitted to support fire-resistive construction. Where not otherwise prohibited by the code, anchors are permitted for installation in fire-resistive construction provided that at least one of the following conditions is fulfilled:

- Anchors are used to resist wind or seismic forces only, or
- Anchors that support gravity load-bearing structural elements are within a fire-resistive envelope or a fire-resistive membrane, are protected by approved fire-resistive materials, or have been evaluated for resistance to fire exposure in accordance with recognized standards, or
- Anchors are used to support non-structural elements.

10.4.10 (This version applies where testing has been performed in cracked masonry.) **Cracked Masonry:** The design of anchors must be in accordance with the provisions for cracked masonry where analysis indicates that cracking may occur ($f_t > f_r$) in the vicinity of the anchor due to service loads or deformations over the anchor service life.

10.4.11 (This version applies where testing has only been performed in uncracked masonry.) **Uncracked Masonry:** The design of anchors must be in accordance with the provisions for uncracked masonry where analysis indicates that cracking will not occur ($f_t > f_r$) in the vicinity of the anchor due to service loads or deformations over the anchor service life.

10.4.12 Head joints: Design of anchors in fully grouted CMU construction shall avoid location of anchors in head joints.

10.4.13 Seismic Loads:

10.4.13.1 (This version applies where acceptable seismic test data is supplied in accordance with this criteria.)

10.4.13.2 (This version applies where testing has been performed in fully grouted concrete masonry unit construction.) **Fully Grouted CMU Construction:** Anchors are permitted to be used to resist seismic tension and shear loads in fully grouted concrete masonry unit construction. Anchors must not be installed in plastic hinge zones.

10.4.13.2.1 (This version applies where testing has been performed in the open cells of partially grouted concrete masonry unit construction.) **Partially Grouted or Ungrouted CMU Construction:** Anchors are permitted to resist seismic tension and shear loads in partially grouted or ungrouted concrete masonry unit construction.

10.4.13.2.2 (This version applies where testing has been performed in clay brick masonry unit construction.) **Clay Brick Masonry Construction:** Anchors are permitted to be used to resist seismic tension and shear loads in clay brick masonry construction.

10.4.13.3 Load Combinations: When using the basic load combinations in accordance with IBC Section 1605.3.1, allowable loads are not permitted to be increased for seismic or wind loading.

10.4.13.4 (This version applies where acceptable seismic test data is not supplied in accordance with this criteria.) Use of the anchors to resist seismic loads is beyond the scope of this report. The allowable loads or load combinations for the adhesive anchors shall not be adjusted for anchors subjected to wind loads.

10.4.14 Special inspection shall be performed in accordance with the conditions of this report.

10.4.15 Anchors are not permitted for tightening torque installation until adhesive cure time indicated in the MPII is fully reached.

10.4.16 The minimum allowable member thickness shall be specified in the evaluation report and shall be no less than $1.5h_{ef}$ unless other values are substantiated by testing. ■

TABLE 10.1—SAMPLE FORMAT FOR REPORTING ADHESIVE ANCHOR DATA FOR ANCHORS QUALIFIED FOR USE IN GROUTED MASONRY

Anchor qualified per Table 4.1 (uncracked masonry only) or Table 4.2 (uncracked and cracked masonry)

Anchor Manufacturer	Anchor Designation[1]	Criteria and Code	Symbol	Criteria Section of Reference Standard[2]	Units	Anchor Nominal diameters					
Anchor outside diameter			d_a		in. (mm)						
Hole diameter			d_o		in. (mm)						
Installation torque[3]			T_{inst}		ft.-lb. (N-m)						
Effective anchor tension area			A_{se}		in.^{2} (mm^2)						
Anchor	Minimum specified yield strength		f_y	ASTM F606	psi (MPa)						
	Minimum specified ultimate strength		f_{ut}	ASTM F606	psi (MPa)						
	Bolt steel cross-section reduction at break		-	ASTM F606	%						
Nominal steel tensile strength of a single anchor			N_s		lb. (N)						
Strength reduction factor for tensile steel failure modes			ϕ		-						
Nominal steel shear strength of a single anchor			V_s		lb. (N)						
Strength reduction factor for shear steel failure modes			ϕ		-						
Effective embedment depth(s)			h_{ef}		in. (mm)						
Anchor Category			-		-						
Characteristic limiting bond stress in uncracked masonry			$\tau_{k,uncr}$		psi (MPa)						
Characteristic limiting bond stress in cracked masonry			$\tau_{k,cr}$		psi (MPa)						
Adjustment for Temperature Category B			κ_{tempB}		-						
Adjustment for exposure to sulfur			κ_{sulfur}		-						
Adjustment for non-sustained tensile loading			κ_{sust}		-						
Minimum nominal CMU unit dimensions			$lxwxh$		in.x in. x in. (mm x mm x mm)						
Minimum edge distance, top of wall			$c_{min,top}$		in. (mm)						
Optional simulated seismic values											
Adjustment for seismic tensile loading			κ_{seis}		-						
Nominal strength of a single anchor for seismic shear loading			$V_{k,seis}$		lb. (N)						
Optional top-of-wall values											
Adjustment for top-of-wall tensile loading			κ_{top}		-						

Nominal strength of a single anchor for shear loading at the top or end of a wall	$V_{k,top}$		lb. (N)						
Nominal strength of a single anchor for seismic shear loading at the top or end of a wall	$V_{k,seis,top}$		lb. (N)						

[1] Trade name. For anchors distributed under multiple trade names, list all.

[2] ASTM or ISO Standards

[3] Manufacturer's recommended torque as applicable for torque-controlled adhesive anchors